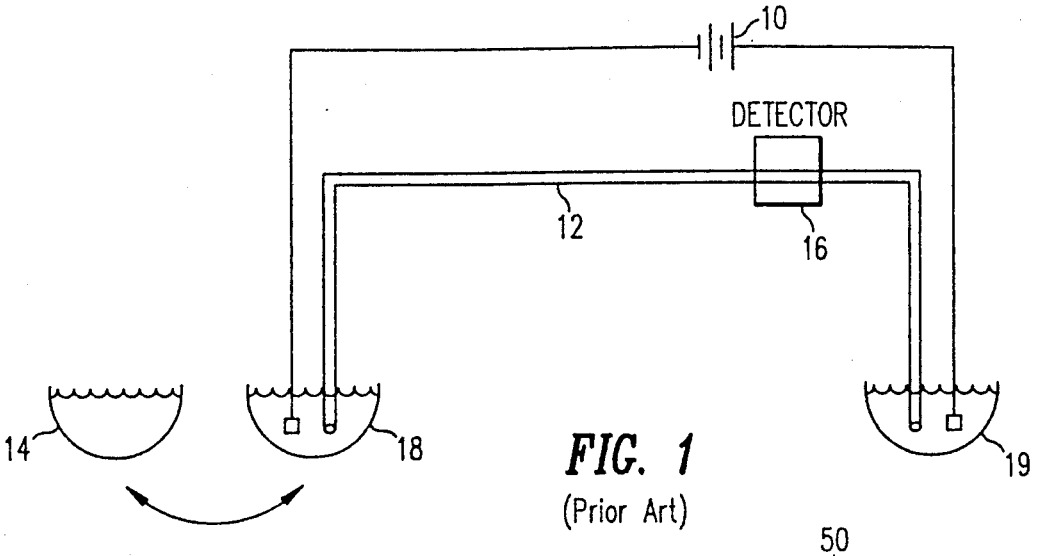

FIG. 1
(Prior Art)

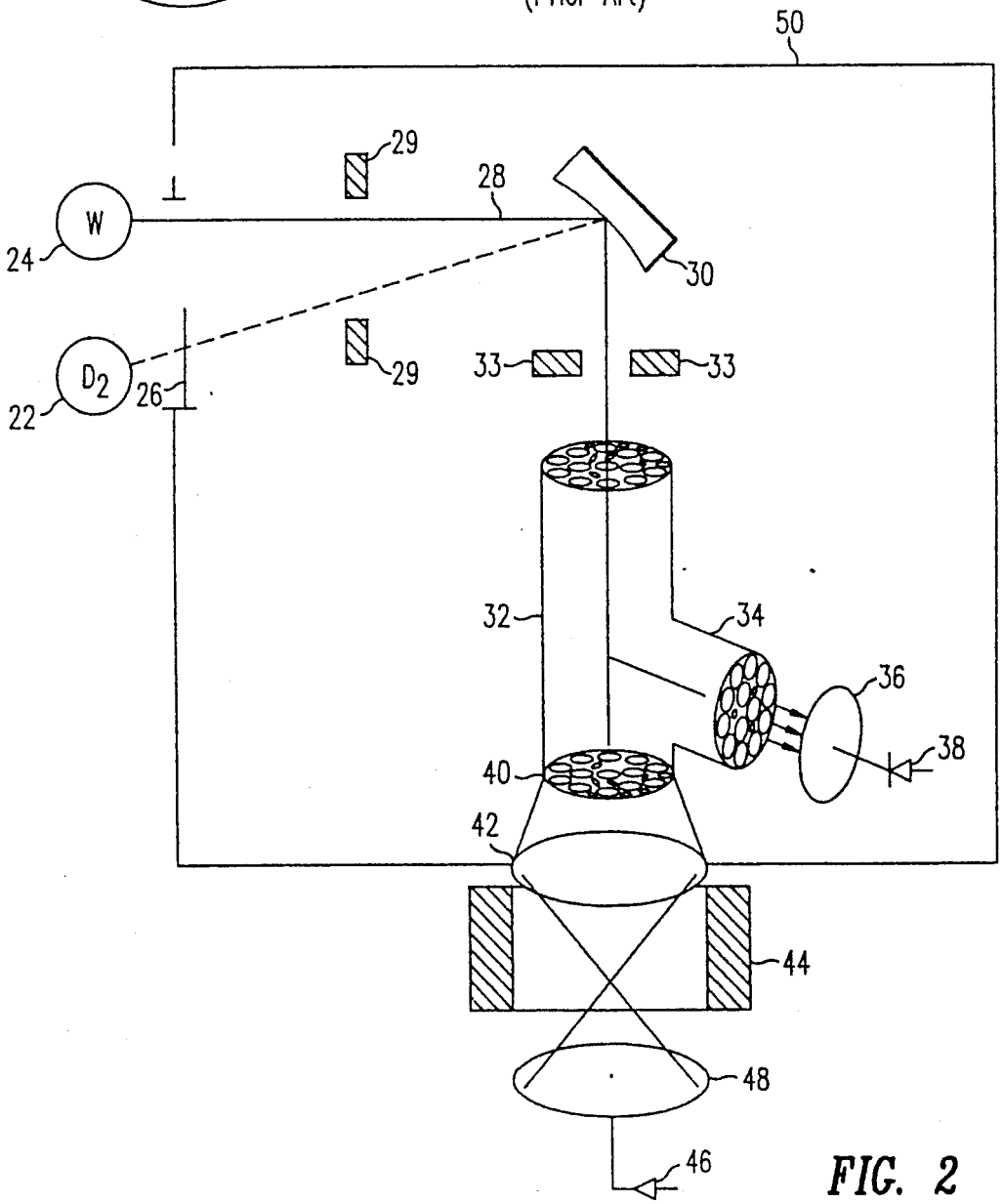

FIG. 2
(Prior Art)