US009411446B2

(12) **United States Patent**
Lombardi et al.

(10) **Patent No.: US 9,411,446 B2**
(45) **Date of Patent: Aug. 9, 2016**

(54) **ELECTRONIC DEVICE WITH A TOUCH SENSOR AND METHOD FOR OPERATING THE SAME**

(71) Applicant: **Motorola Mobility LLC**, Libertyville, IL (US)

(72) Inventors: **Michael J. Lombardi**, Lake Zurich, IL (US); **Amber M. Pierce**, Evanston, IL (US)

(73) Assignee: **Google Technology Holdings LLC**, Mountain View, CA (US)

(*) Notice: Subject to any disclaimer, the term of this patent is extended or adjusted under 35 U.S.C. 154(b) by 161 days.

(21) Appl. No.: **14/071,498**

(22) Filed: **Nov. 4, 2013**

(65) **Prior Publication Data**

US 2015/0126246 A1 May 7, 2015

(51) **Int. Cl.**
G06F 3/041 (2006.01)
H04N 21/4415 (2011.01)

(52) **U.S. Cl.**
CPC ***G06F 3/041*** (2013.01)

(58) **Field of Classification Search**
CPC combination set(s) only.
See application file for complete search history.

(56) **References Cited**

U.S. PATENT DOCUMENTS

8,311,514 B2 11/2012 Bandyopadhyay et al.
8,446,382 B2 5/2013 Goto et al.
8,810,524 B1 * 8/2014 Rosenberg et al. 345/173
2002/0021278 A1 * 2/2002 Hinckley et al. 345/156
2009/0209293 A1 * 8/2009 Louch 455/566
2010/0159998 A1 * 6/2010 Luke et al. 455/567
2011/0312349 A1 * 12/2011 Forutanpour et al. 455/466
2012/0258773 A1 * 10/2012 Alvarez et al. 455/556.1
2013/0265284 A1 * 10/2013 Yun et al. 345/175
2013/0300687 A1 * 11/2013 Park 345/173
2014/0004907 A1 * 1/2014 Kim et al. 455/566
2014/0078086 A1 * 3/2014 Bledsoe et al. 345/173

FOREIGN PATENT DOCUMENTS

WO 2010107827 A1 9/2010

OTHER PUBLICATIONS

Motorola Atrix 4G Android Phone (AT&T), amazon.
Daniel P, HTC One Max phablet poses for a family portrait, flashes a fingerprint sensor, Aug. 19, 2013.
Joanna Stern, iPhone 5S and 5C: Everything You Need to Know About the Next iPhone, Aug. 20, 2013.

* cited by examiner

Primary Examiner — Kumar Patel
Assistant Examiner — Amy C Onyekaba
(74) *Attorney, Agent, or Firm* — Shumaker & Sieffert, P.A.

(57) **ABSTRACT**

An electronic device has a combination touch sensor (such as a fingerprint reader) and mechanical switch (actuated, for example, by a button press). The electronic device carries out various functions according to whether the touch sensor is being touched, the mechanical switch is being actuated, the electronic device is face up or face down, the state of the electronic device (awake or in sleep mode), and the function that the electronic device is currently carrying out.
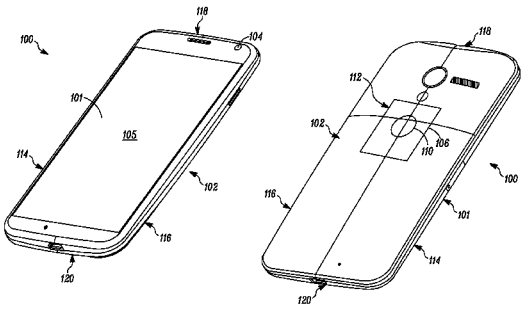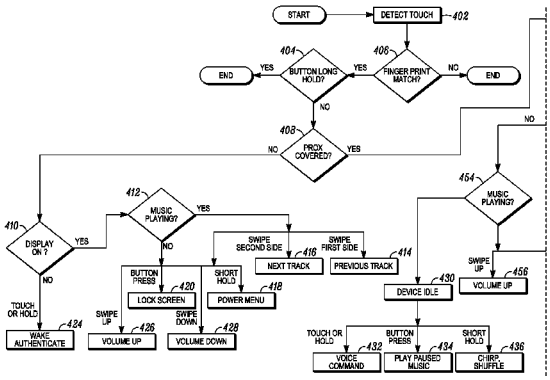
21 Claims, 6 Drawing Sheets