US009410546B2

(12) **United States Patent**
Jaeger et al.

(10) **Patent No.: US 9,410,546 B2**
(45) **Date of Patent: Aug. 9, 2016**

(54) **RECIPROCATING PUMP CAVITATION DETECTION AND AVOIDANCE**

(71) Applicant: **Baker Hughes Incorporated**, Houston, TX (US)

(72) Inventors: **Thomas Jaeger**, The Woodlands, TX (US); **Ashley Christian**, Houston, TX (US); **Gregory E. Griffith**, Spring, TX (US); **Gulshan Singh**, The Woodlands, TX (US); **Michael Lataquin**, Houston, TX (US)

(73) Assignee: **BAKER HUGHES INCORPORATED**, Houston, TX (US)

(*) Notice: Subject to any disclaimer, the term of this patent is extended or adjusted under 35 U.S.C. 154(b) by 186 days.

(21) Appl. No.: **14/458,068**

(22) Filed: **Aug. 12, 2014**

(65) **Prior Publication Data**

US 2016/0047373 A1 Feb. 18, 2016

(51) **Int. Cl.**
F04B 51/00 (2006.01)
F04B 49/06 (2006.01)

(52) **U.S. Cl.**
CPC ***F04B 51/00*** (2013.01); ***F04B 49/065*** (2013.01)

(58) **Field of Classification Search**
None
See application file for complete search history.

(56) **References Cited**

U.S. PATENT DOCUMENTS

5,720,598	A	2/1998	de Chizzele	
6,882,960	B2 *	4/2005	Miller	F04B 51/00 702/177
7,013,223	B1	3/2006	Zhang et al.	
7,401,500	B2	7/2008	Wago et al.	
7,621,179	B2	11/2009	Ens et al.	
7,643,945	B2	1/2010	Baklanov et al.	
7,757,562	B2	7/2010	Mercer	
8,366,402	B2 *	2/2013	St. Michel	E21B 47/0008 417/53
8,543,245	B2	9/2013	Heitman et al.	
8,554,494	B2	10/2013	Adnan et al.	
2002/0123856	A1 *	9/2002	Eryurek	G05B 23/0243 702/140
2004/0112115	A1	6/2004	Ramamoorthy et al.	
2004/0167738	A1 *	8/2004	Miller	F04B 51/00 702/114
2005/0126639	A1	6/2005	Ens et al.	
2005/0180868	A1 *	8/2005	Miller	F04B 51/00 417/437
2006/0228225	A1	10/2006	Rogers	
2008/0006089	A1	1/2008	Adnan et al.	
2009/0043530	A1 *	2/2009	Sittler	G01M 13/028 702/141
2010/0300683	A1	12/2010	Looper et al.	
2013/0259707	A1 *	10/2013	Yin	F04B 49/00 417/53

* cited by examiner

Primary Examiner — Andre Allen
(74) *Attorney, Agent, or Firm* — Shawn Hunter

(57) **ABSTRACT**

Systems and methods for detecting cavitation in a reciprocating positive displacement pump. Fluid pressure proximate the pump's suction manifold is compared to a predetermined pressure that would be conducive to cavitation. If the detected pressure approximates the predetermined pressure, the presence of cavitation is confirmed via correlation of increased vibration.
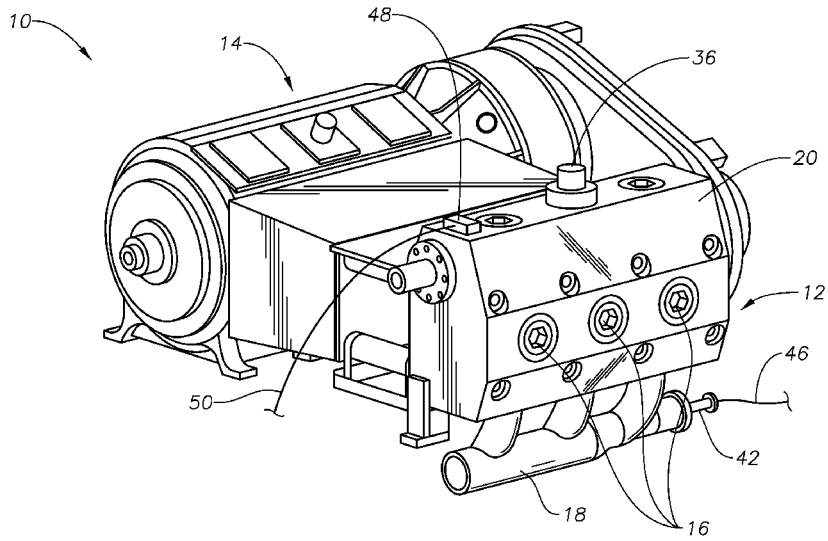
15 Claims, 8 Drawing Sheets