US009408446B2

(12) **United States Patent**
Liebers et al.

(10) **Patent No.: US 9,408,446 B2**
(45) **Date of Patent: Aug. 9, 2016**

(54) **CASE FOR A PORTABLE ELECTRONIC DEVICE**

(71) Applicant: **Diversified Products, Inc.**, Collegeville, PA (US)

(72) Inventors: **Steven B. Liebers**, Collegeville, PA (US); **Zhongqiu Zhu**, Wenzhou (CN)

(73) Assignee: **Diversified Products, Inc.**, Collegeville, PA (US)

(*) Notice: Subject to any disclaimer, the term of this patent is extended or adjusted under 35 U.S.C. 154(b) by 0 days.

(21) Appl. No.: **14/326,048**

(22) Filed: **Jul. 8, 2014**

(65) **Prior Publication Data**

US 2016/0007704 A1 Jan. 14, 2016

(51) **Int. Cl.**

A45C 11/00	(2006.01)
A45C 11/04	(2006.01)
H04B 1/3888	(2015.01)
A45F 5/02	(2006.01)
A45C 15/00	(2006.01)

(52) **U.S. Cl.**

CPC ***A45C 11/00*** (2013.01); ***A45C 11/04*** (2013.01); ***H04B 1/3888*** (2013.01); *A45C 15/00* (2013.01); *A45C 2011/002* (2013.01); *A45C 2200/15* (2013.01); *A45F 5/021* (2013.01)

(58) **Field of Classification Search**

CPC A45C 11/00; A45C 11/04; A45C 15/00; A45C 2011/002; A45F 5/021; H04B 1/3888

USPC 206/320, 504; 361/679.01, 679.3; 455/575.1, 575.8

See application file for complete search history.

(56) **References Cited**

U.S. PATENT DOCUMENTS

D631,246	S	1/2011	Boettner	
8,047,364	B2 *	11/2011	Longinotti-Buitoni	A45C 11/00 206/320
8,504,127	B2 *	8/2013	Altschul et al.	455/575.8
2005/0016897	A1 *	1/2005	Cho et al.	206/713
2005/0255898	A1 *	11/2005	Huang	455/575.8
2011/0089078	A1 *	4/2011	Ziemba	206/570
2011/0210018	A1 *	9/2011	Friedman et al.	206/5
2011/0294556	A1 *	12/2011	Carlberg et al.	455/575.8
2013/0105518	A1 *	5/2013	Mcpherson et al.	222/153.11
2013/0258269	A1 *	10/2013	Shalon	351/79
2014/0228082	A1 *	8/2014	Morrow et al.	455/575.8

* cited by examiner

Primary Examiner — Chun Cheung
(74) *Attorney, Agent, or Firm* — Caesar Rivise, PC

(57) **ABSTRACT**

A case for a portable electronic device is provided including a primary cover having an outer surface and an inner surface, the inner surface dimensioned to securely retain the portable electronic device. The case further includes a pouch to receive a pair of reading glasses on the outer surface of the primary cover. The pouch is secured to the outer surface by a receiver in the form of a pair of parallel tracks disposed on the outer surface of the primary cover that mates with a pair of corresponding rails disposed on the pouch.
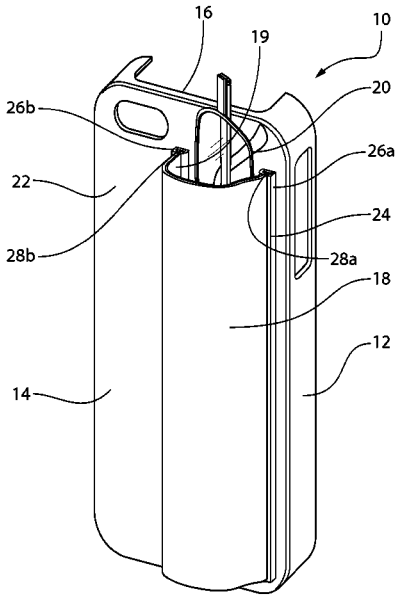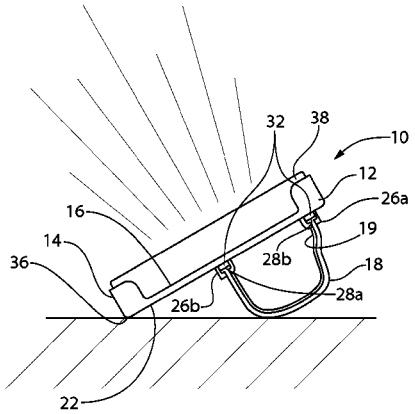
7 Claims, 5 Drawing Sheets