US009408346B2

(12) **United States Patent**
Schulze Selting et al.

(10) **Patent No.: US 9,408,346 B2**
(45) **Date of Patent: Aug. 9, 2016**

(54) **COMBINE HEADER WITH SUPPORT WHEELS**

(71) Applicant: **Carl Geringhoff GmbH & Co. KG**, Ahlen (DE)

(72) Inventors: **Stephan Schulze Selting**, Enniger (DE); **Dirk Webermann**, Senden (DE); **Bernd Albinger**, Rheda-Wiedenbrück (DE); **Reimer Tiessen**, Oldenburg (DE)

(73) Assignee: **Carl Geringhoff GmbH & Co. KG**, Ahlen (DE)

(*) Notice: Subject to any disclaimer, the term of this patent is extended or adjusted under 35 U.S.C. 154(b) by 0 days.

(21) Appl. No.: **14/749,664**

(22) Filed: **Jun. 25, 2015**

(65) **Prior Publication Data**

US 2015/0373908 A1 Dec. 31, 2015

(30) **Foreign Application Priority Data**

Jun. 25, 2014 (DE) 10 2014 009 158

(51) **Int. Cl.**
A01D 67/00 (2006.01)
A01D 41/14 (2006.01)
A01D 75/00 (2006.01)

(52) **U.S. Cl.**
CPC ***A01D 41/14*** (2013.01); ***A01D 75/00*** (2013.01)

(58) **Field of Classification Search**
CPC . A01D 41/141; A01D 41/145; A01D 75/287; A01D 89/004; Y10S 56/15; Y10S 56/10; A01B 69/008
USPC ..... 56/208, 10.2 E, DIG. 15, 15.8
See application file for complete search history.

(56) **References Cited**

U.S. PATENT DOCUMENTS

2,501,533 A * 3/1950 Miyagi A01D 45/10 56/10.6
2,660,015 A * 11/1953 Briscoe A01D 46/08 56/10.9
2,955,813 A * 10/1960 Hume A01D 34/03 267/173
3,249,366 A * 5/1966 Meyer A01B 69/008 104/244.1
3,257,787 A * 6/1966 Wells A01D 27/04 56/121.45
3,349,549 A * 10/1967 Van Der Lely ..... A01D 34/28 56/10.2 R
3,633,345 A * 1/1972 Scarnato A01D 43/105 56/14.1
3,675,404 A * 7/1972 Izakson A01D 75/287 56/209
3,747,311 A * 7/1973 DeCoene A01D 41/141 56/208

(Continued)

Primary Examiner — Árpád Fábián-Kovács
(74) *Attorney, Agent, or Firm* — Gudrun E. Huckett

(57) **ABSTRACT**

A combine header for a harvesting machine is provided with a frame and a cutter bar connected to a leading end of the frame. A conveying device connected to the frame conveys stalk material cut by the cutter bar. A drive device drives the cutter bar and the conveying device. First support wheels are connected to the frame at lateral ends of the combine header and support the combine header on the ground. The support wheels arranged underneath the combine header.
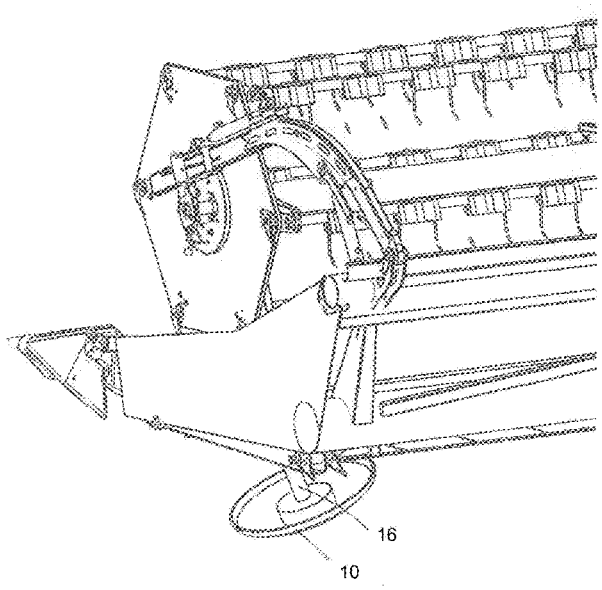
9 Claims, 5 Drawing Sheets