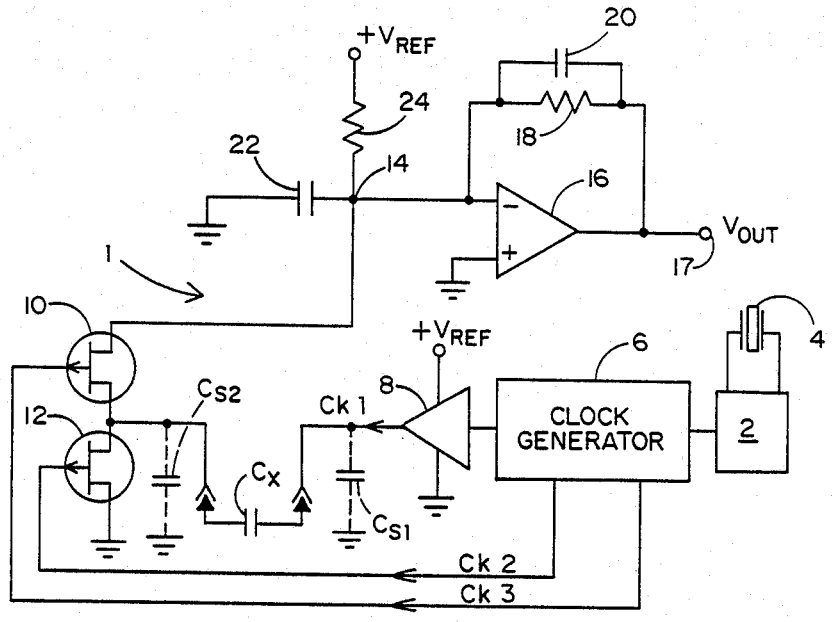
+VREF
20
24
18
22
14
16
VOUT
17
1
10
+VREF
6
4
CS2
8
Ck 1
CLOCK GENERATOR
2
12
CX
CS1
Ck 2
Ck 3

FIG. 1

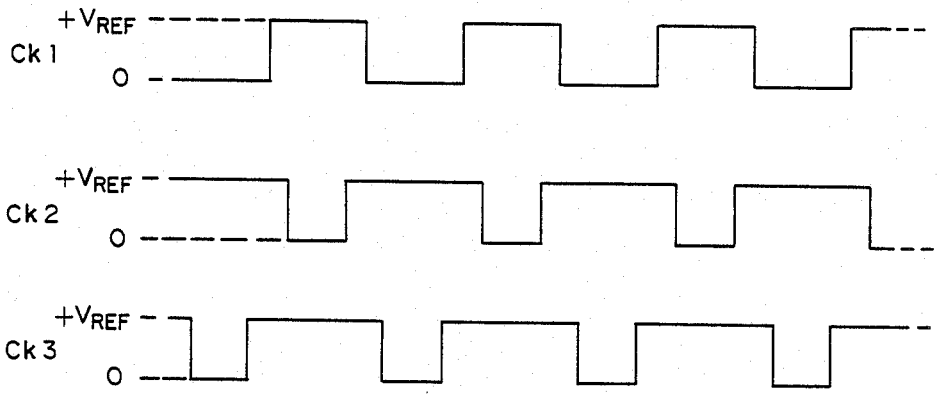
+VREF
Ck 1
0
+VREF
Ck 2
0
+VREF
Ck 3
0

FIG. 2