106-84 CROSS REFERENCE EXAMINER

Sept. 19, 1961 L. A. RUNTON ET AL 3,000,846

HIGH TEMPERATURE MOLDED FABRIC PACKING GLAND

Filed Nov. 19, 1957

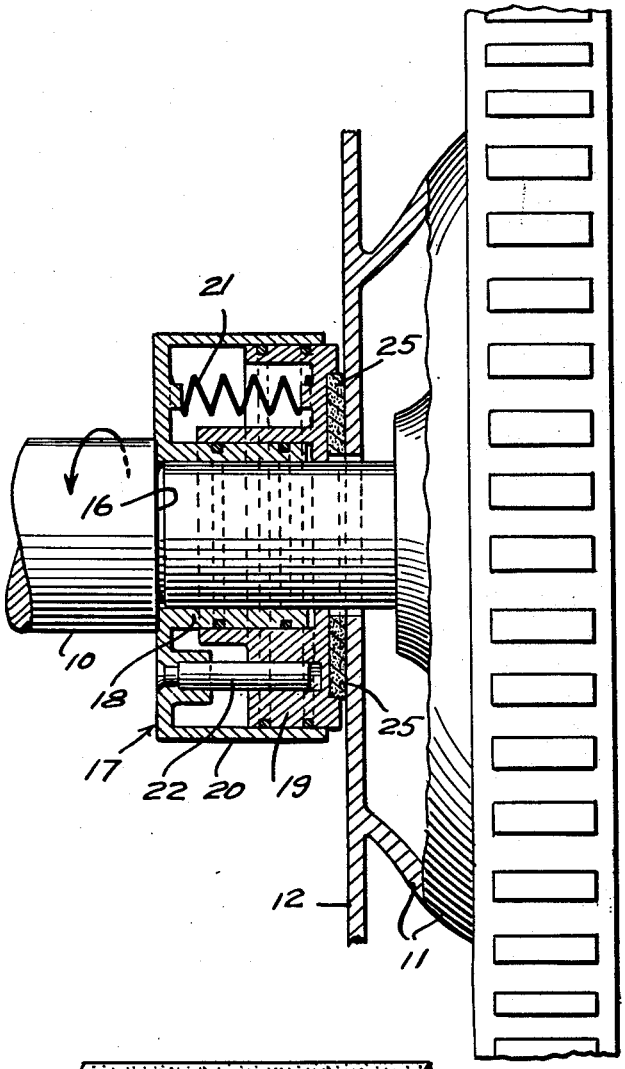

Fig. 1.

Fig. 4.

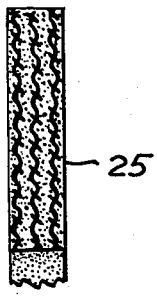

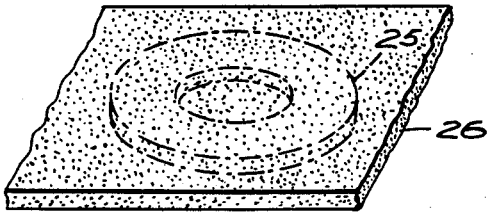

Fig. 2.

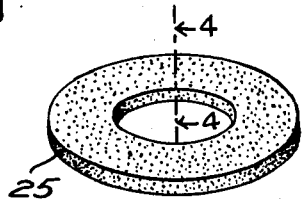

Fig. 3.

INVENTORS
LESLIE A. RUNTON
HENRY C. MORTON
BY
ATTORNEY