No Printed Specification Available

46X

S. G. DORR.

CLOTH SHEARING MACHINE.

Patented Oct. 20, 1792.

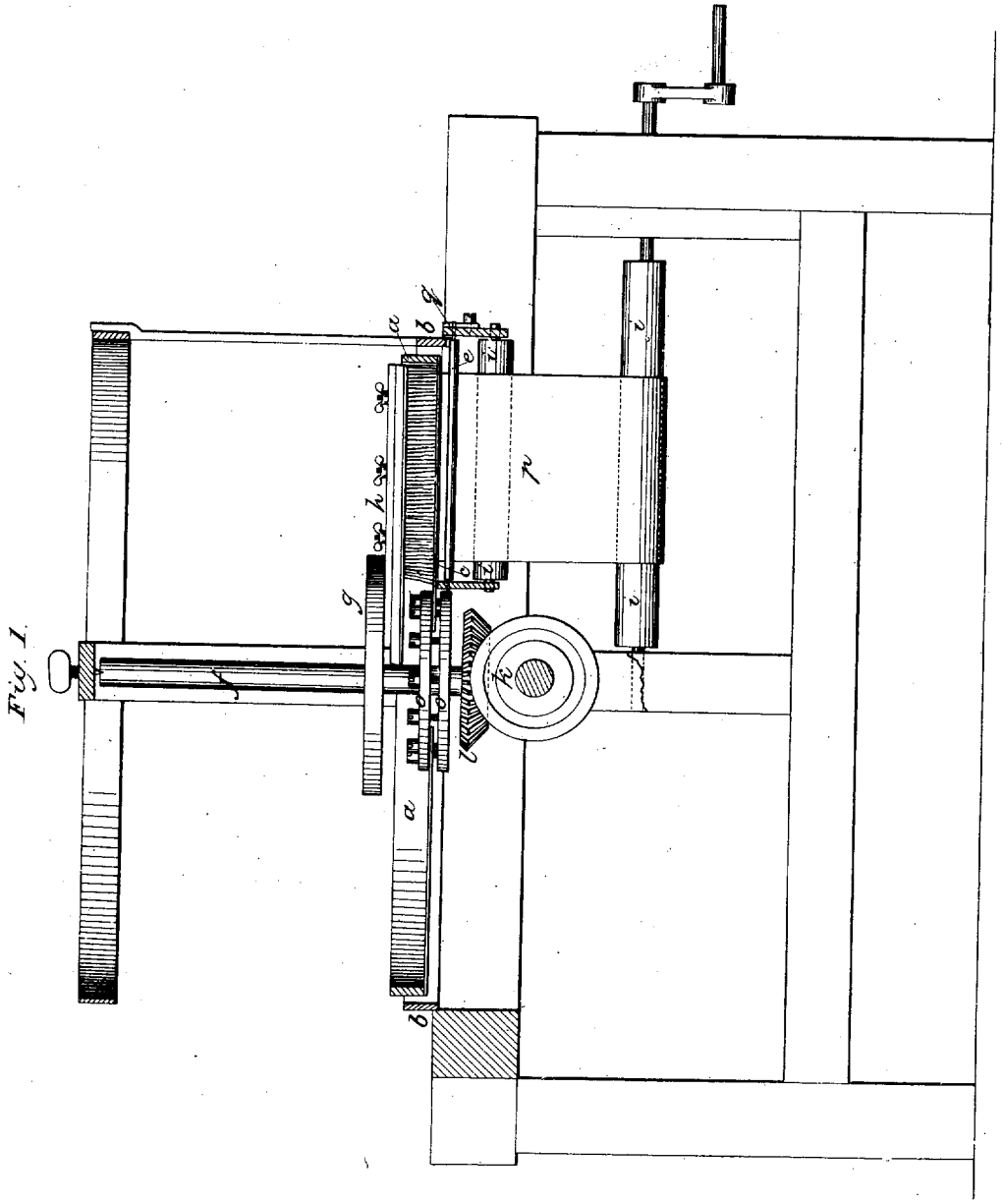

THE NORRIS PETERS CO., PHOTO-LITHO., WASHINGTON, D. C