United States Patent [19]

Hasson

[11] **Patent Number: 4,496,345**

[45] **Date of Patent: Jan. 29, 1985**

[54] **BALLOONED CANNULA**

[76] Inventor: **Harrith M. Hasson,** 2043 N. Sedgwick, Chicago, Ill. 60614

[21] Appl. No.: **413,152**

[22] Filed: **Aug. 30, 1982**

[51] **Int. Cl.**[3] **A61M 25/00**

[52] **U.S. Cl.** **604/103;** 604/102

[58] **Field of Search** 604/96, 97, 98, 103, 604/102, 101, 100

[56] **References Cited**

U.S. PATENT DOCUMENTS

2,460,473	2/1949	Smith .	
2,480,041	8/1949	Myller .	
2,845,930	8/1958	Brown .	
3,232,253	8/1966	Di Palma	604/103 X
3,385,301	5/1968	Harautuneian .	
3,448,739	6/1969	Stark et al. .	
3,547,126	12/1970	Birtwell	604/102
3,865,666	2/1975	Shoney	604/103 X
3,965,909	6/1976	Waddell et al. .	
3,970,089	7/1976	Saice .	
3,978,863	9/1976	Fettel et al. .	
3,985,601	10/1976	Panagrossi	604/103 X
3,991,767	11/1976	Miller, Jr. et al. .	
3,996,938	12/1976	Clark .	
4,029,104	6/1977	Kerber .	
4,057,065	11/1977	Thow .	
4,088,135	5/1978	O'Neill .	
4,100,923	7/1978	Southern .	
4,114,625	9/1978	Onat .	
4,117,847	10/1978	Clayton .	
4,122,858	10/1978	Schiff .	
4,154,243	5/1979	Parel et al.	604/100
4,222,384	9/1980	Birtwell	604/103
4,341,210	7/1982	Elam .	
4,341,217	7/1982	Ferguson et al. .	

FOREIGN PATENT DOCUMENTS

325740 10/1902 France .

OTHER PUBLICATIONS

"Ballooned Uterine Elevator Cannula", Hasson, H. M., *Amer. Journal of Obstetrics and Gynecology,* vol. 123, No. 6, pp. 658–659, Nov. 15, 1975.

"Effective Uterine Fundal Elevation in Laparoscopy", Hasson, H. M., *The Journal of Reproductive Medicine,* p. 76 Editorial Page, 1975.

"A Modified Ballooned Uterine Elevator Cannula", Hasson, H. M., *The Journal of Reproductive Medicine,* vol. 25, No. 2, pp. 72–74, Aug. 1980.

Primary Examiner—Stephen C. Pellegrino

Attorney, Agent, or Firm—Wood, Dalton, Phillips, Mason & Rowe

[57] **ABSTRACT**

A ballooned cannula including an elongated tube encompassed by a housing formed of a biologically inert, soft plastic. A balloon is formed on one end of the tube and the housing by a tip structure including radially inner and outer sleeves, the inner sleeve including a shoulder against which the tube end may abut and the outer sleeve defining the balloon. The cannula also includes an integral handle formed of flexible material including a flexible injection receiver.
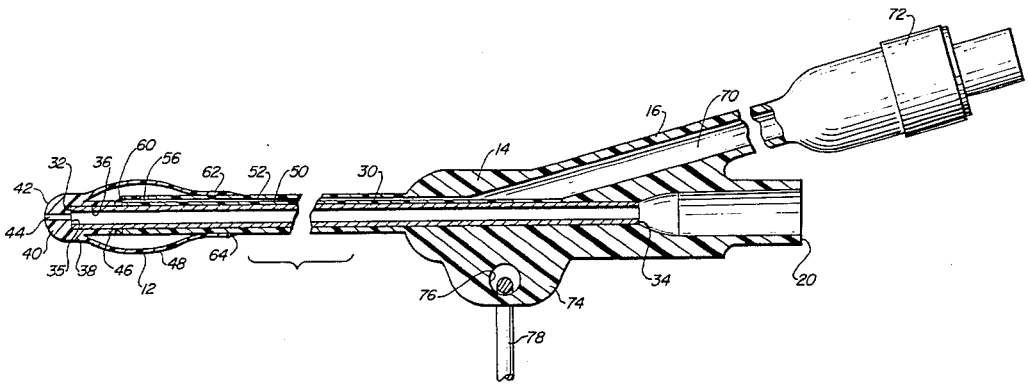
7 Claims, 6 Drawing Figures