US005389745A

United States Patent [19]

Sakamoto

[11] Patent Number: 5,389,745

[45] Date of Patent: Feb. 14, 1995

[54] HANDWRITING INPUT APPARATUS FOR INPUTTING HANDWRITTEN DATA FROM UNSPECIFIED DIRECTION

[75] Inventor: **Hiroyuki Sakamoto**, Tokyo, Japan

[73] Assignee: **Kabushiki Kaisha Toshiba**, Kawasaki, Japan

[21] Appl. No.: **942,842**

[22] Filed: **Sep. 10, 1992**

[30] **Foreign Application Priority Data**

Sep. 11, 1991 [JP] Japan 3-231241

[51] **Int. Cl.**[6] **G08C 21/00**; G09G 5/38; G06K 9/00

[52] **U.S. Cl.** **178/18**; 345/179; 382/13

[58] **Field of Search** 382/3, 44–47, 382/13; 178/185, 20, 19; 340/712; 345/179, 126

[56] **References Cited**

U.S. PATENT DOCUMENTS

4,933,514	1/1990	Bowers	178/18
4,947,156	8/1990	Sato et al.	178/18 X
5,031,225	7/1991	Tachikawa et al.	382/21
5,195,133	3/1993	Kapp et al.	380/9
5,199,068	3/1993	Cox	380/23

FOREIGN PATENT DOCUMENTS

0339588	11/1989	European Pat. Off. .
0379336	7/1990	European Pat. Off. .
3540626C2	5/1986	Germany .
4-43420	2/1992	Japan .

Primary Examiner—Stephen Chin
Assistant Examiner—Kevin Kim
Attorney, Agent, or Firm—Finnegan, Henderson, Farabow, Garrett & Dunner

[57] **ABSTRACT**

The handwriting input device includes an integrated display input device formed by integrating a display device and a tablet for inputting coordinates one on the other. The integrated display input device is used to input coordinate data of a designated position to an input region displayed on the display device. In accordance with the input region containing coordinate data, handwritten characters, or the like are input to the handwriting input apparatus. The input region is shifted in an arbitrary direction by rotation and transfer in the screen of the display device. In the case where the input region is rotated.
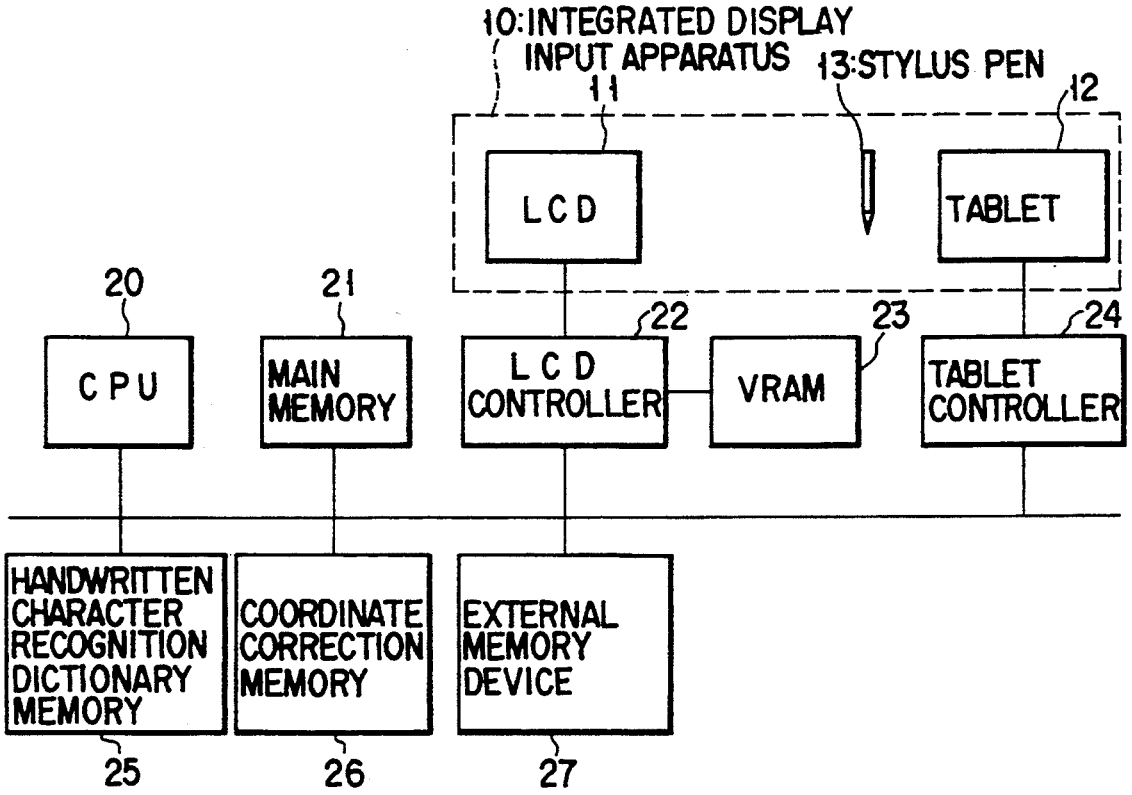
11 Claims, 16 Drawing Sheets