US007054145B2

(12) **United States Patent**
Tanaka et al.

(10) **Patent No.: US 7,054,145 B2**
(45) **Date of Patent: *May 30, 2006**

(54) **MECHANISM FOR ADJUSTING A DISPLAY**

(75) Inventors: **Toshiyuki Tanaka**, Laguna Niguel, CA (US); **Hiroyuki Kusaka**, Tokyo (JP); **Aage Granaas**, Redwood City, CA (US)

(73) Assignee: **Kabushiki Kaisha Toshiba**, Tokyo (JP)

(*) Notice: Subject to any disclaimer, the term of this patent is extended or adjusted under 35 U.S.C. 154(b) by 230 days.

This patent is subject to a terminal disclaimer.

(21) Appl. No.: **10/716,859**

(22) Filed: **Nov. 18, 2003**

(65) **Prior Publication Data**

US 2005/0105252 A1 May 19, 2005

(51) **Int. Cl.**
H05K 5/00 (2006.01)

(52) **U.S. Cl.** **361/679**; 361/681; 361/683

(58) **Field of Classification Search** 361/680, 361/681, 683

See application file for complete search history.

(56) **References Cited**

U.S. PATENT DOCUMENTS

5,268,817	A	12/1993	Miyagawa et al.	
6,005,767	A	12/1999	Ku et al.	
6,196,850	B1	3/2001	Dietz et al.	
6,231,371	B1	5/2001	Helot	
6,282,082	B1	8/2001	Armitage et al.	
6,396,687	B1	5/2002	Sun et al.	
6,430,038	B1	8/2002	Helot et al.	
6,437,973	B1	8/2002	Helot et al.	
6,464,195	B1	10/2002	Hildebrandt	
6,477,871	B1	11/2002	Shaw et al.	
6,483,445	B1	11/2002	England	
6,504,707	B1	1/2003	Agata et al.	
6,519,143	B1	2/2003	Goko	
6,519,148	B1	2/2003	Nakagawa et al.	
6,654,234	B1	11/2003	Landry et al.	
6,717,798	B1	4/2004	Bell et al.	
6,774,870	B1	8/2004	Mead, Jr. et al.	
6,856,506	B1	2/2005	Doherty et al.	
6,873,521	B1	3/2005	Landry	
6,912,121	B1 *	6/2005	Karidis et al.	361/681
2003/0142474	A1	7/2003	Karidis et al.	
2004/0057197	A1	3/2004	Hill et al.	
2005/0041380	A1 *	2/2005	Jeong	
2005/0052833	A1	3/2005	Tanaka et al.	

FOREIGN PATENT DOCUMENTS

JP	07-049725	2/1995
JP	10-055227	2/1998
JP	2000-228128	8/2000
JP	2002-222026	8/2002
JP	2003-044169	2/2003

* cited by examiner

Primary Examiner—Yean-Hsi Chang
(74) *Attorney, Agent, or Firm*—Blakely Sokoloff Taylor & Zafman, LLP

(57) **ABSTRACT**

An electronic device implemented with a display and a body case formed by a first body and a second body. The electronic device comprises a hinge and a shaft. The hinge is rotationally coupled to the first body and the second body. The shaft has a first end coupled to the body case and a second end coupled to the display housing. The shaft is adapted to horizontally rotate and translate the display to enable vertical rotation of the display and the second body by the hinge.
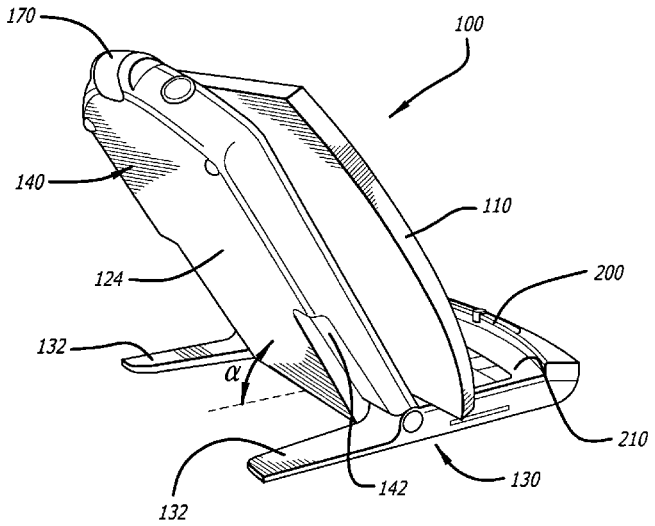
20 Claims, 6 Drawing Sheets