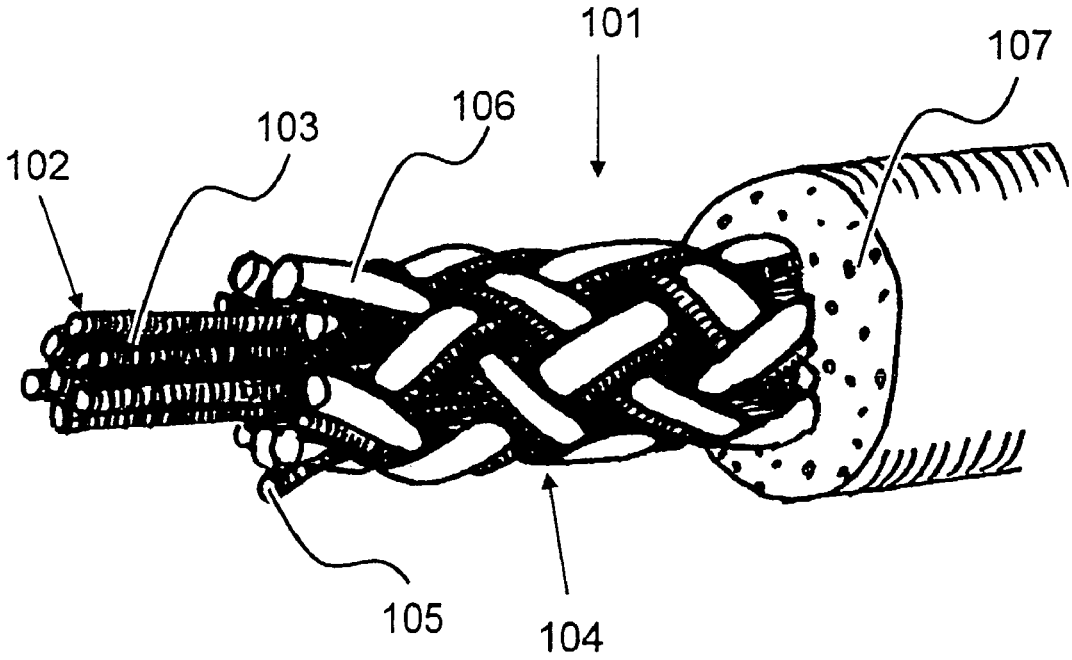


Figure 1

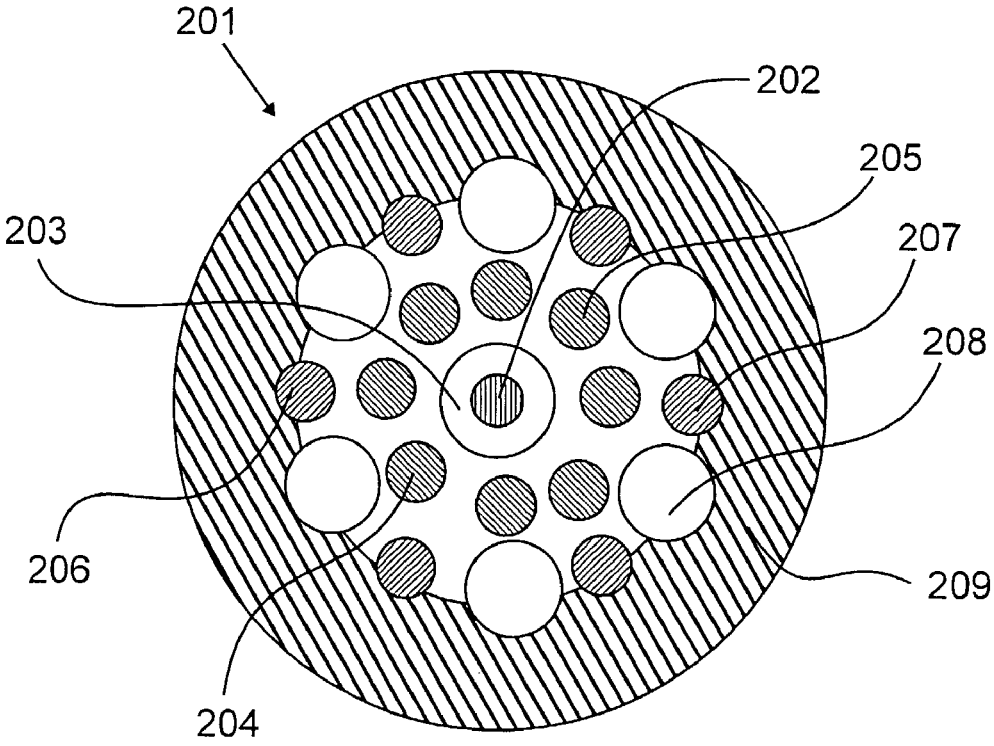


Figure 2