Dec. 15, 1970 W. H. COLLINS 3,546,945

FLUID SAMPLER

Filed Sept. 10, 1969 2 Sheets-Sheet 2

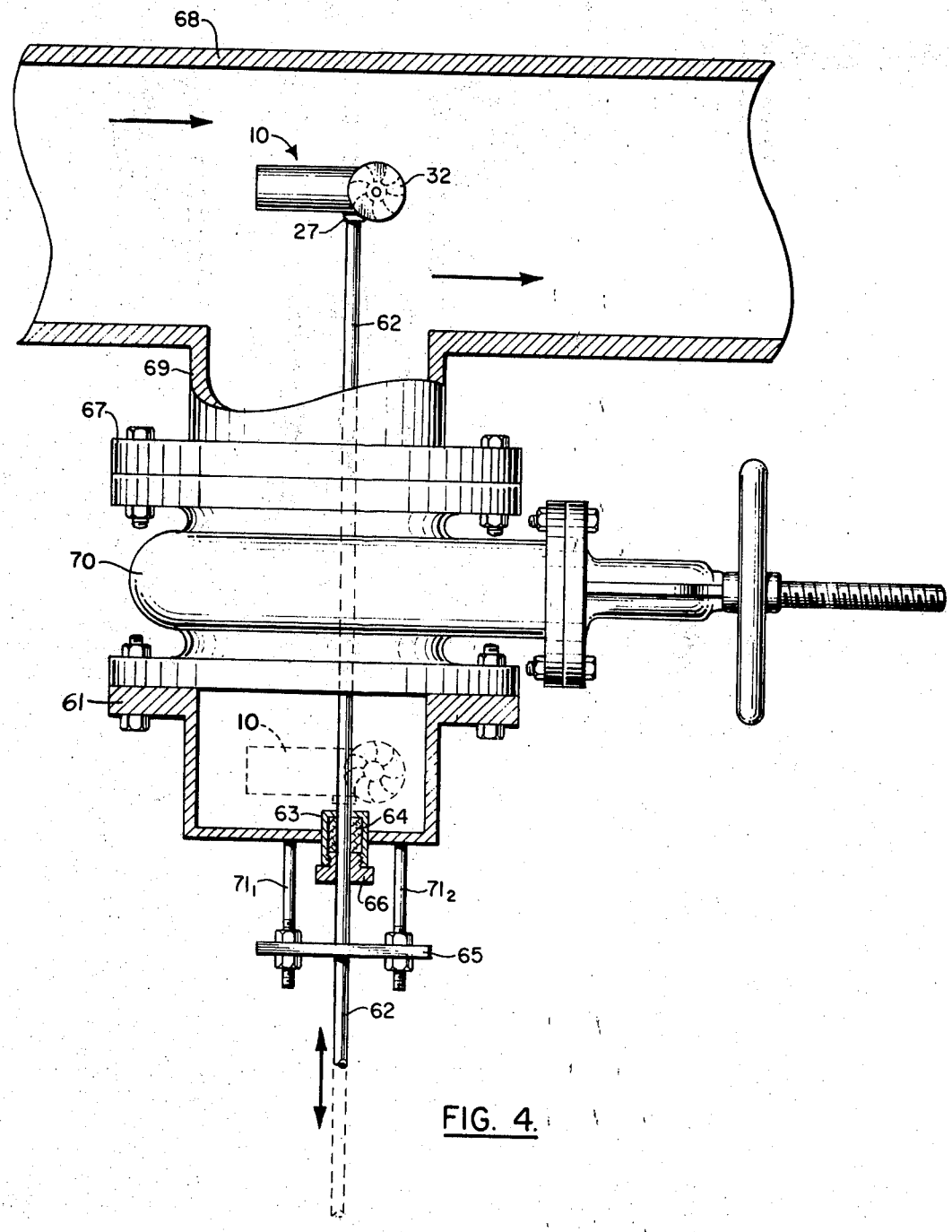

FIG. 4.

INVENTOR.
WILLIAM H. COLLINS

BY Llewellyn A. Proctor
ATTORNEY