Dec. 15, 1970 W. H. COLLINS 3,546,945

FLUID SAMPLER

Filed Sept. 10, 1969 2 Sheets-Sheet 1

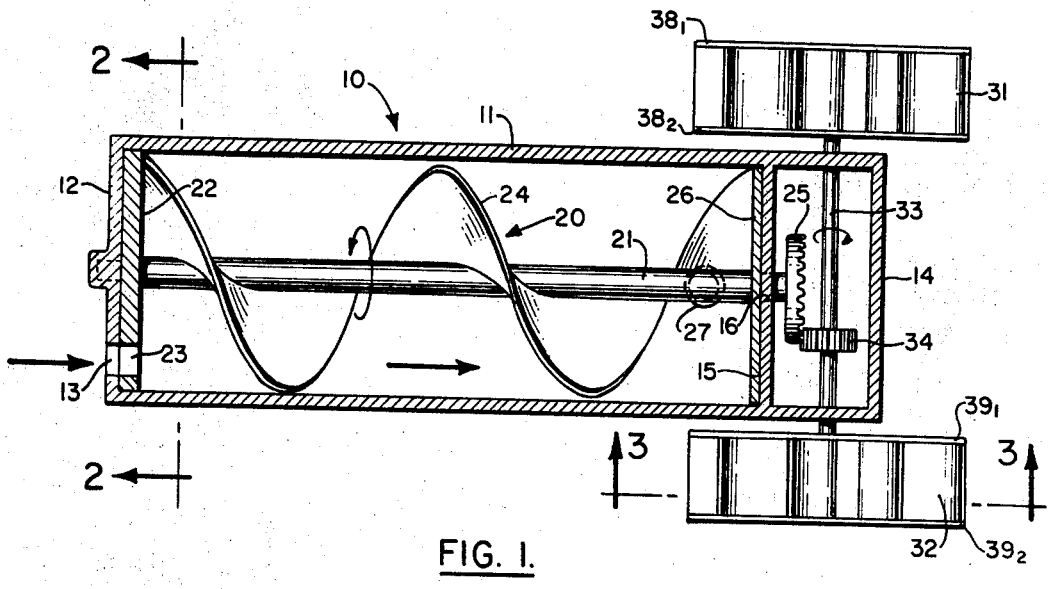

FIG. 1.

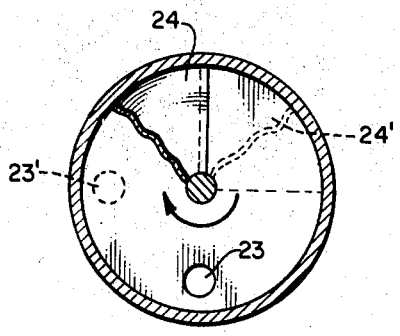

FIG. 2.

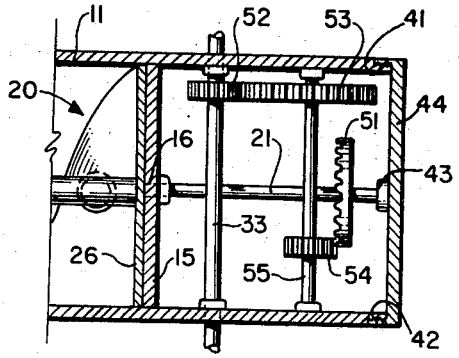

FIG. 5.

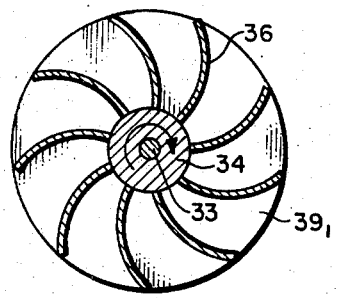

FIG. 3.

INVENTOR.
WILLIAM H. COLLINS

BY [illegible]
ATTORNEY