July 26, 1960 N. J. REGNIER ET AL 2,946,945

SOLAR ENERGY CONVERTING APPARATUS OR THE LIKE

Filed March 11, 1958

2 Sheets-Sheet 1

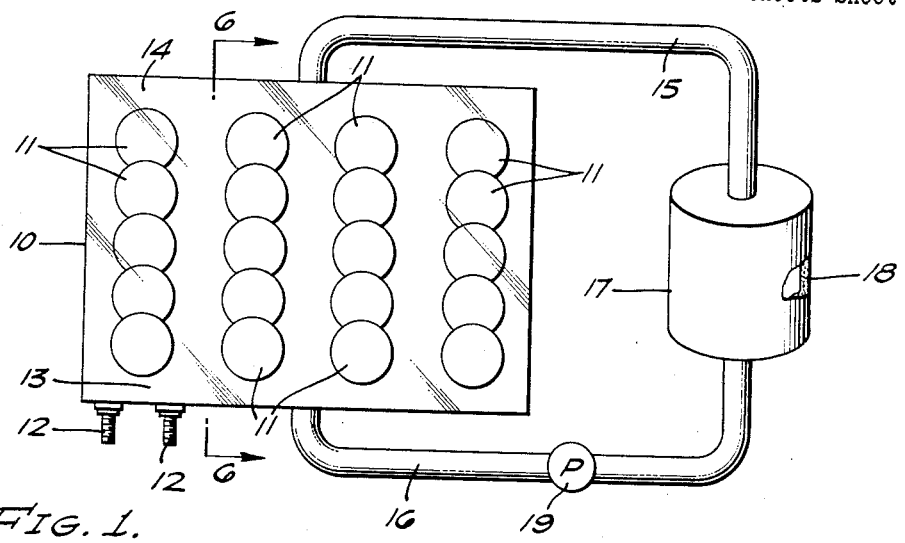

FIG. 1.

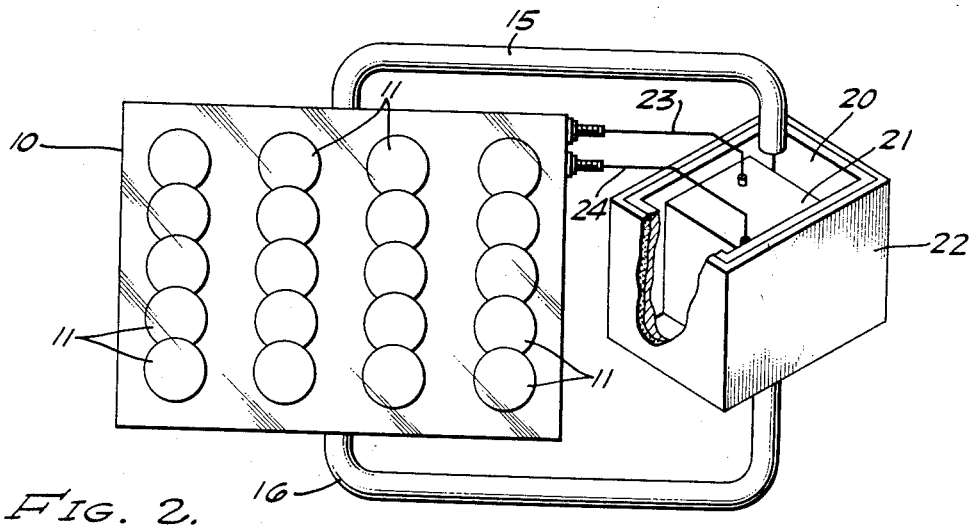

FIG. 2.

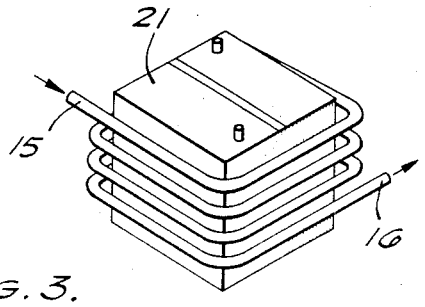

FIG. 3.

NORMAN J. REGNIER
LAWRENCE W. SCHMIDT
DONN E. KEFES
INVENTORS

BY

ATTORNEY