Jan. 24, 1956 C. WOODALL 2,731,645

ANKLE JOINT FOR ARTIFICIAL LIMBS

Filed Oct. 20, 1952

Fig. 1.

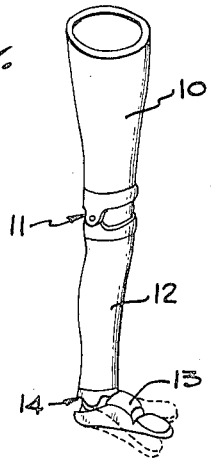

Fig. 2.

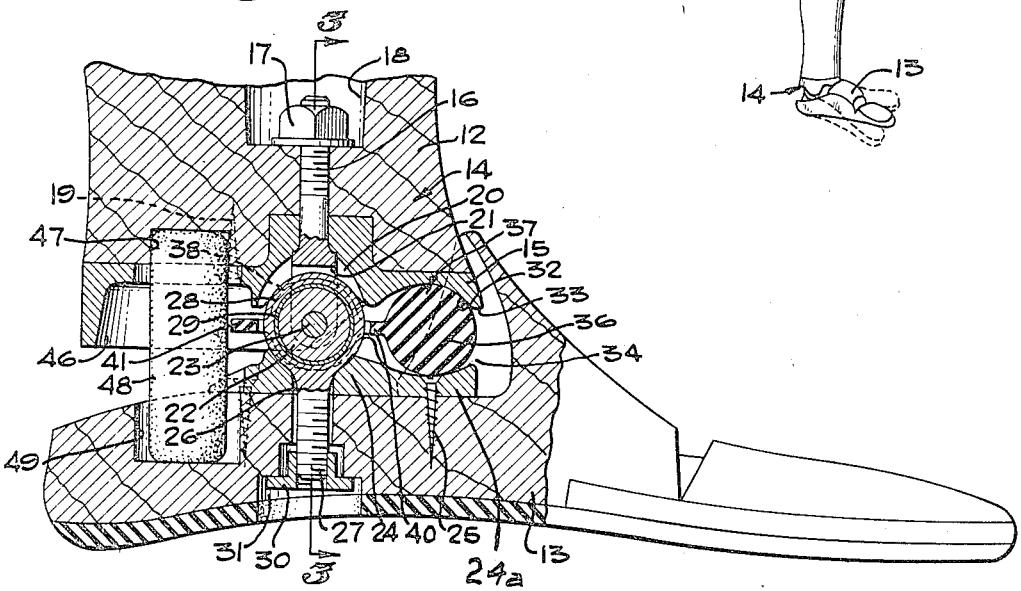

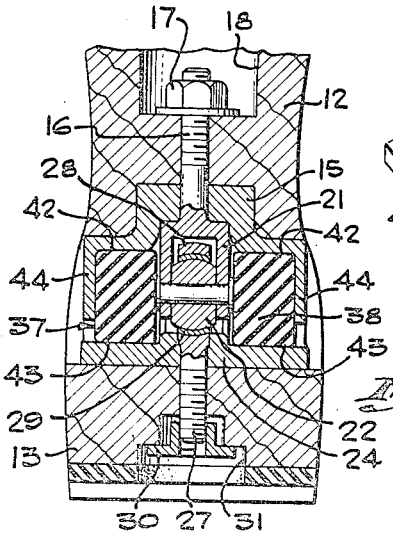

Fig. 3.

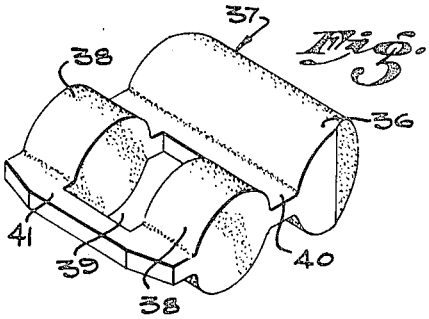

Fig. 4.

CARL WOODALL,
INVENTOR.

BY

ATTORNEY