US006125645A

United States Patent [19]

Horn

[11] **Patent Number: 6,125,645**

[45] **Date of Patent: Oct. 3, 2000**

[54] **MOISTURE REMOVAL PHASE SHIFT PERSONAL COOLING GARMENT**

[76] Inventor: **Stephen T. Horn**, 1661 James Wharf Rd., White Stone, Va. 22578

[21] Appl. No.: **09/017,341**

[22] Filed: **Feb. 2, 1998**

Related U.S. Application Data

[60] Provisional application No. 60/049,749, Jun. 12, 1997.

[51] **Int. Cl.**[7] **F25D 23/12**

[52] **U.S. Cl.** **62/259.3**; 2/DIG. 1; 2/458

[58] **Field of Search** ..... 62/4, 259.3, 530, 62/457.2; 2/904, DIG. 1, DIG. 5, 458

[56] **References Cited**

U.S. PATENT DOCUMENTS

3,429,138	2/1969	Goldmerstein	62/259.3
3,710,395	1/1973	Spano et al.	2/78
4,856,294	8/1989	Scaringe et al.	62/259.3
5,123,411	6/1992	Noziri	128/403
5,217,408	6/1993	Kaine	454/338
5,289,695	3/1994	Parrish et al.	62/259.3
5,415,222	5/1995	Colvin et al.	165/46
5,524,293	6/1996	Kung	2/102

Primary Examiner—William Doerrler

[57] **ABSTRACT**

The present invention provides a body cooling garment to easily and effectively protect the human body in hot conditions. By suspending in vapor contact a cold surface with channels in it's surface; moisture is evaporated from the body, condensed on the cold surface, and the body shielded from environmental heat. The condensed moisture is channeled from the garment.
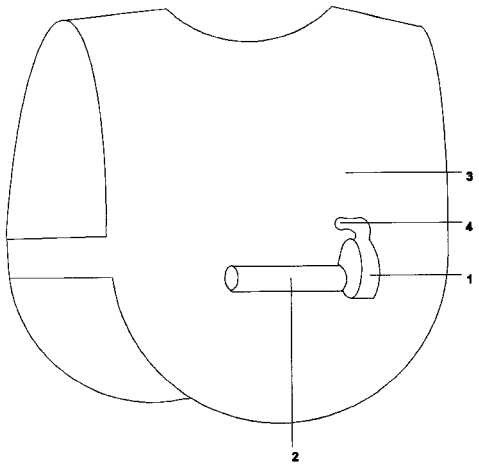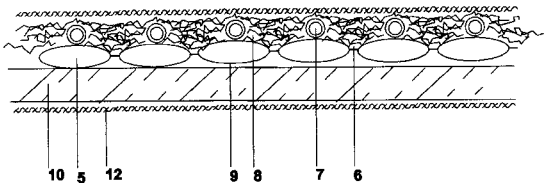
13 Claims, 2 Drawing Sheets