Dec. 21, 1965 E. L. BALLARD 3,224,145

FLY TRAP

Filed Feb. 13, 1963

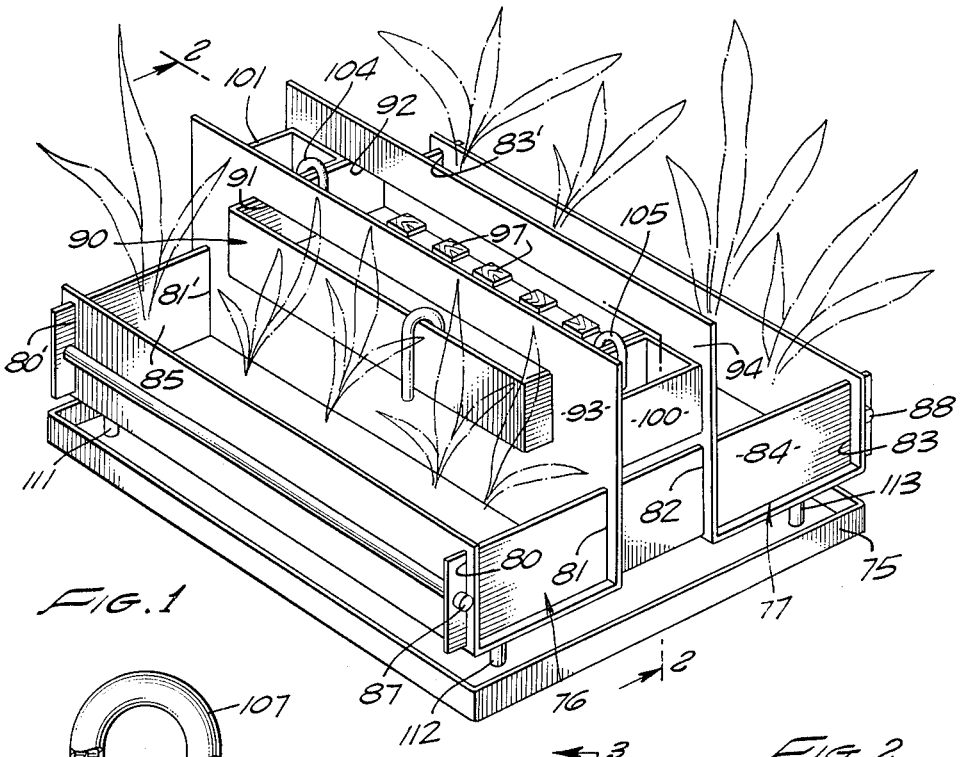

FIG. 1

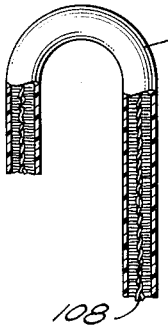

FIG. 4

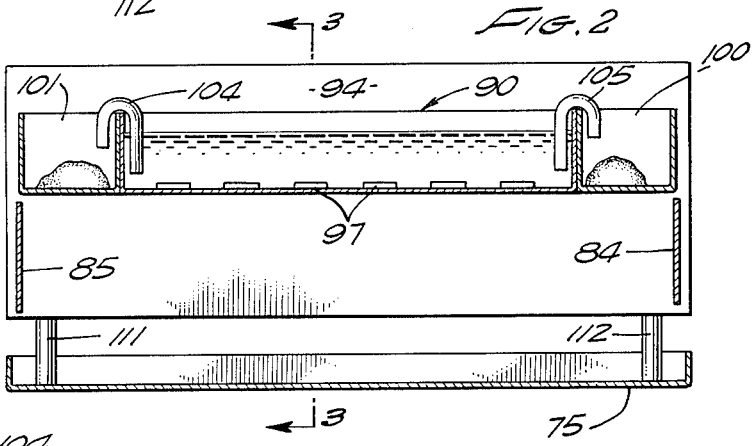

FIG. 2

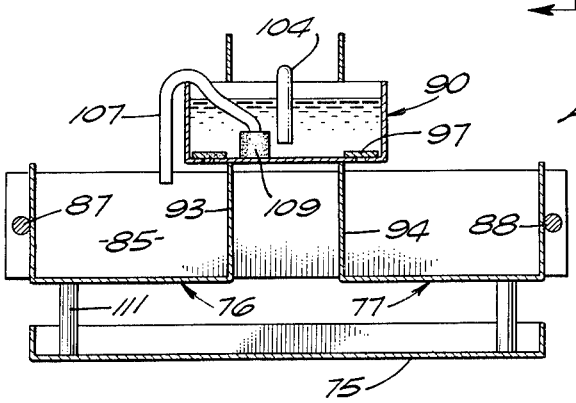

FIG. 3

EARCY L. BALLARD
INVENTOR.

BY
Edward C. Walsh
ATTORNEY