US009918845B2

(12) **United States Patent**
Roby et al.

(10) **Patent No.: US 9,918,845 B2**
(45) **Date of Patent: Mar. 20, 2018**

(54) **AUGMENT SYSTEM FOR AN IMPLANT**

(71) Applicant: **Zimmer, Inc.**, Warsaw, IN (US)

(72) Inventors: **Keith A. Roby**, Jersey City, NJ (US); **Timothy A. Hoeman**, Morris Plains, NJ (US); **John Chernosky**, Brick, NJ (US); **Ray Zubok**, Midland Park, NJ (US)

(73) Assignee: **Zimmer, Inc.**, Warsaw, IN (US)

(*) Notice: Subject to any disclaimer, the term of this patent is extended or adjusted under 35 U.S.C. 154(b) by 0 days.

(21) Appl. No.: **15/035,402**

(22) PCT Filed: **Nov. 13, 2014**

(86) PCT No.: **PCT/US2014/065363**
§ 371 (c)(1),
(2) Date: **May 9, 2016**

(87) PCT Pub. No.: **WO2015/073618**
PCT Pub. Date: **May 21, 2015**

(65) **Prior Publication Data**

US 2016/0278925 A1 Sep. 29, 2016

Related U.S. Application Data

(60) Provisional application No. 61/903,748, filed on Nov. 13, 2013, provisional application No. 61/903,731, filed on Nov. 13, 2013.

(51) **Int. Cl.**
A61F 2/38 (2006.01)
A61F 2/30 (2006.01)

(52) **U.S. Cl.**
CPC ***A61F 2/389*** (2013.01); ***A61F 2/30734*** (2013.01); *A61F 2002/30433* (2013.01);
(Continued)

(58) **Field of Classification Search**
CPC A61F 2/3872; A61F 2/389; A61F 2002/30736; A61F 2/30734; A61B 5/4514
See application file for complete search history.

(56) **References Cited**

U.S. PATENT DOCUMENTS

4,878,791 A 11/1989 Kurihara et al.
4,944,757 A 7/1990 Martinez et al.
(Continued)

FOREIGN PATENT DOCUMENTS

DE 19741087 A1 4/1999
DE 10253888 A1 7/2005
(Continued)

OTHER PUBLICATIONS

"International Application Serial No. PCT/US2014/065362, International Search Report dated Feb. 12, 2015", 5 pgs.
(Continued)

Primary Examiner — Alvin Stewart
(74) *Attorney, Agent, or Firm* — Schwegman Lundberg & Woessner, P.A.

(57) **ABSTRACT**
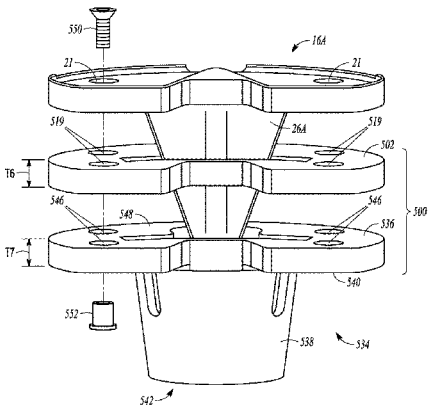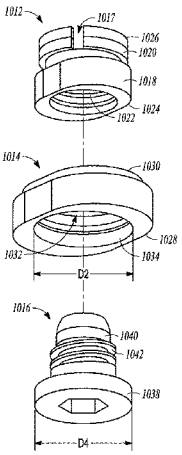
Augments systems and methods for attaching two or more augments to an underside (**50**) of a tibial baseplate (**16**) are disclosed. An augment system (**100**) can include a first augment (**102**) having a superior surface (**106**) and an inferior surface (**108**), the superior surface configured for attachment to the underside of the tibial baseplate. The augment system can include a second augment (**104**) having a superior surface (**110**) and an inferior surface (**112**), the superior surface configured for attachment to the inferior surface of the first augment. The first and second augments can be formed of different materials. One or more additional augments can be used with the first and second augments, and the augment system can be stacked on a resected surface of the tibia. In an example, the augment that directly contacts
(Continued)