US00D517545S

(12) United States Design Patent

Buckel et al.

(10) Patent No.: US D517,545 S

(45) Date of Patent: ** Mar. 21, 2006

(54) **ELECTRONIC BOOK**

(76) Inventors: **Gregory W. Buckel**, 1344 E. 35th St., Erie, PA (US) 16504; **Robert Buckel**, 2814 Contessa La., Erie, PA (US) 16506

(**) Term: **14 Years**

(21) Appl. No.: **29/223,767**

(22) Filed: **Feb. 22, 2005**

(51) **LOC (8) Cl.** **14-02**

(52) **U.S. Cl.** **D14/345**

(58) **Field of Classification Search** ..... D14/341–346, D14/373; D19/26, 59, 60; 345/1.1, 156, 169, 345/173; 349/12; 178/18.03; 434/307 R, 434/308, 309, 317; 361/681

See application file for complete search history.

(56) **References Cited**

U.S. PATENT DOCUMENTS

5,534,888	A		7/1996	Lebby	
D378,686	S	*	4/1997	Proctor et al.	D19/60
5,663,748	A		9/1997	Huffman	
D385,299	S	*	10/1997	Adams	D14/342
5,697,793	A	*	12/1997	Huffman et al.	434/317
D391,987	S	*	3/1998	Jambhekar et al.	D14/345
5,847,698	A		12/1998	Reavey	
6,011,545	A	*	1/2000	Henderson et al.	345/173
D445,787	S	*	7/2001	Francis	D14/345
6,313,828	B1		11/2001	Chombo	
6,512,497	B1		1/2003	Kondo	
D493,463	S	*	7/2004	Takahashi	D14/373
2003/0179541	A1	*	9/2003	Sullivan	361/681
2004/0046705	A1	*	3/2004	Masazumi et al.	345/1.1
2004/0219501	A1	*	11/2004	Small et al.	434/317

* cited by examiner

Primary Examiner—Freda S. Nunn

(57) **CLAIM**

The ornamental design for an electronic book, as shown.

DESCRIPTION

FIG. **1** is a frontal view showing our design;
FIG. **2** is a back view thereof;
FIG. **3** is a side view thereof;
FIG. **4** is a side view thereof;
FIG. **5** is a top view thereof;
FIG. **6** is a bottom view thereof; and,
FIG. **7** is a perspective view.
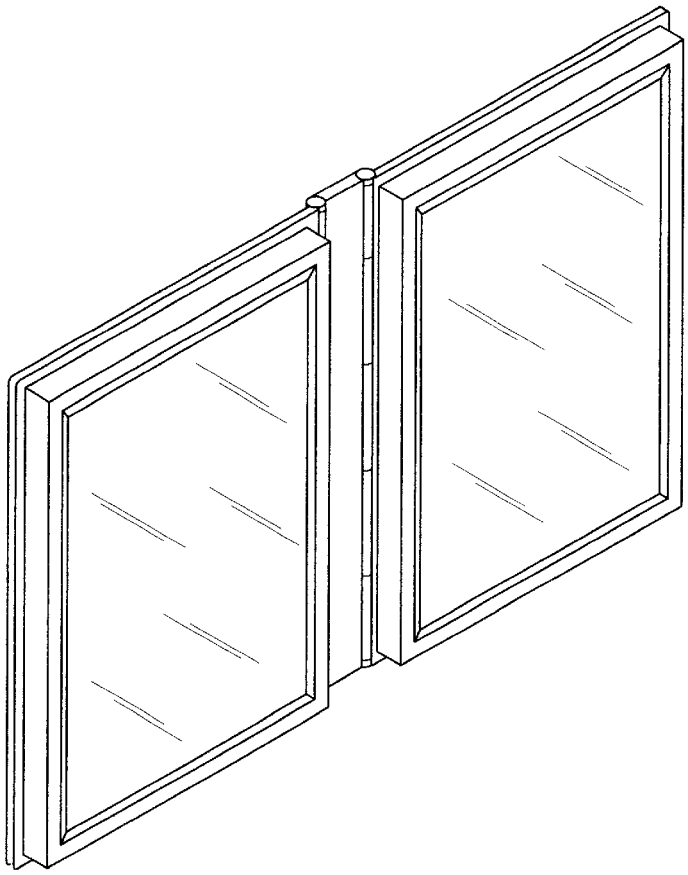
1 Claim, 4 Drawing Sheets