US009411345B2

(12) **United States Patent**
Utsunomiya

(10) **Patent No.: US 9,411,345 B2**
(45) **Date of Patent: Aug. 9, 2016**

(54) **VOLTAGE REGULATOR**

(71) Applicant: **Seiko Instruments Inc.**, Chiba-shi, Chiba (JP)

(72) Inventor: **Fumiyasu Utsunomiya**, Chiba (JP)

(73) Assignee: **SII SEMICONDUCTOR CORPORATION**, Chiba (JP)

(*) Notice: Subject to any disclaimer, the term of this patent is extended or adjusted under 35 U.S.C. 154(b) by 0 days.

(21) Appl. No.: **14/196,750**

(22) Filed: **Mar. 4, 2014**

(65) **Prior Publication Data**

US 2014/0253069 A1 Sep. 11, 2014

(30) **Foreign Application Priority Data**

Mar. 6, 2013 (JP) 2013-044166
Jan. 10, 2014 (JP) 2014-002973

(51) **Int. Cl.**
G05F 1/46 (2006.01)
G05F 1/565 (2006.01)

(52) **U.S. Cl.**
CPC . ***G05F 1/46*** (2013.01); ***G05F 1/565*** (2013.01)

(58) **Field of Classification Search**
CPC G05F 1/575; G05F 1/46; G05F 1/565
USPC 323/273–281
See application file for complete search history.

(56) **References Cited**

U.S. PATENT DOCUMENTS

6,005,378 A * 12/1999 D'Angelo G05F 3/242 323/273
7,095,280 B2 * 8/2006 Regier H03F 3/211 330/258
7,183,755 B2 * 2/2007 Itoh H02H 9/025 323/274
7,816,897 B2 * 10/2010 Illegems G05F 3/262 323/274
8,072,198 B2 * 12/2011 Imura 323/276
8,169,204 B2 * 5/2012 Jian G05F 1/573 323/273
2009/0195290 A1 * 8/2009 Moraveji 327/331
2010/0156364 A1 * 6/2010 Cho G05F 1/573 323/280
2010/0156373 A1 * 6/2010 Imura G05F 1/56 323/282
2012/0013396 A1 * 1/2012 Morino G05F 3/24 327/540

FOREIGN PATENT DOCUMENTS

JP 2005-092693 A 4/2005

* cited by examiner

Primary Examiner — Timothy J Dole
Assistant Examiner — Htet Z Kyaw
(74) *Attorney, Agent, or Firm* — Brinks Gilson & Lione

(57) **ABSTRACT**

Provided is a voltage regulator capable of controlling an output voltage to a predetermined voltage quickly after an undershoot occurs in the output voltage. The voltage regulator includes: an undershoot detection circuit configured to detect a voltage that is based on an output voltage of the voltage regulator, and output a current corresponding to an undershoot amount of the output voltage; and an I-V converter circuit configured to control a current flowing through an output transistor based on a current controlled by an output of an error amplifier and a current flowing from the undershoot detection circuit.
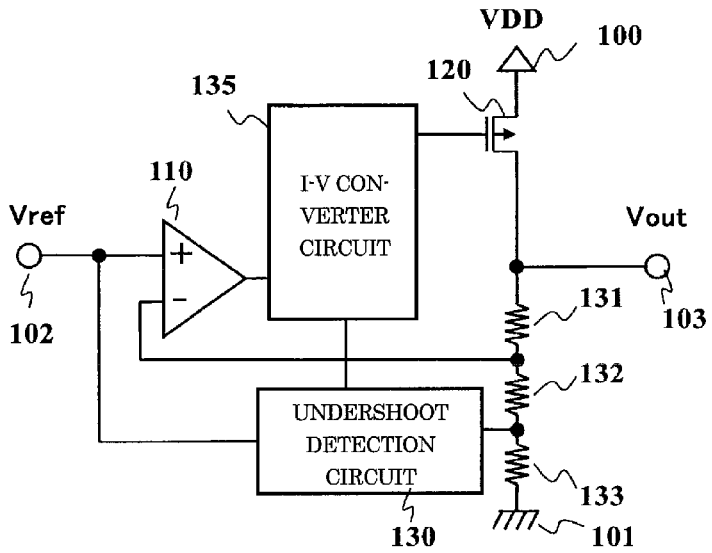
6 Claims, 4 Drawing Sheets