US009510945B2

(12) **United States Patent**
Sutton et al.

(10) **Patent No.: US 9,510,945 B2**
(45) **Date of Patent: *Dec. 6, 2016**

(54) **MEDICAL DEVICE HANDLE**

(71) Applicant: **BOSTON SCIENTIFIC SCIMED, INC.**, Maple Grove, MN (US)

(72) Inventors: **Benjamin Sutton**, San Jose, CA (US); **David J. Paul**, Scotts Valley, CA (US); **Takashi Ino**, San Jose, CA (US)

(73) Assignee: **BOSTON SCIENTIFIC SCIMED INC.**, Maple Grove, MN (US)

(*) Notice: Subject to any disclaimer, the term of this patent is extended or adjusted under 35 U.S.C. 154(b) by 520 days.

This patent is subject to a terminal disclaimer.

(21) Appl. No.: **13/714,927**

(22) Filed: **Dec. 14, 2012**

(65) **Prior Publication Data**

US 2013/0158655 A1 Jun. 20, 2013

Related U.S. Application Data

(60) Provisional application No. 61/577,845, filed on Dec. 20, 2011.

(51) **Int. Cl.**
A61F 2/06 (2013.01)
A61F 2/24 (2006.01)
(Continued)

(52) **U.S. Cl.**
CPC ***A61F 2/2427*** (2013.01); ***A61B 17/00*** (2013.01); ***A61F 2/2436*** (2013.01); ***A61F 2/962*** (2013.01);
(Continued)

(58) **Field of Classification Search**
CPC A61M 25/01; A61M 25/0147; A61F 2/24; A61F 2/2436; A61F 2/2427; A61F 2/2418; A61F 2002/9517; A61F 2/95; A61F 2/962; A61F 2/2466; A61F 2002/9511;A61F 2002/9528; A61F 2002/9534; A61F 2/1662; A61F 2/1667; A61F 2/167; A61F 2/1672; A61B 17/00; A61B 2017/2946; A61B 2017/00393; A61B 2017/0046; A61B 2017/0042; A61B 17/2841; A61B 17/2909; A61B 2017/2912; A61B 1/0052; A61B 19/22; A61B 17/00234; A61B 2017/291; B25G 1/00–1/10
(Continued)

(56) **References Cited**

U.S. PATENT DOCUMENTS

3,027,637 A * 4/1962 Seiler B26B 21/32 30/526
3,241,259 A * 3/1966 McBride F41B 15/022 42/1.08
(Continued)

FOREIGN PATENT DOCUMENTS

CN 1338951 A 3/2002
EP 0512725 A1 11/1992
(Continued)

OTHER PUBLICATIONS

Andersen, H.R. et al. "Transluminal implantation of artificial heart valves. Description of a new expandable aortic valve and initial results with implantation by catheter technique in closed chest pigs." Euro. Heart J. 1992; 13:704-708.
(Continued)

Primary Examiner — Amy R Weisberg
(74) *Attorney, Agent, or Firm* — Seager, Tufte & Wickhem LLP

(57) **ABSTRACT**
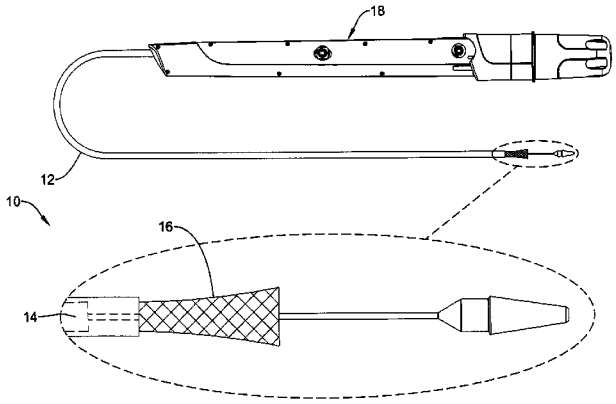
A medical device handle may include an elongated handle housing, a rotatable collar disposed about the handle housing, a rotatable control knob disposed about the collar, and a slidable door disposed about the collar. The door may be
(Continued)