US009410445B2

(12) **United States Patent**
**Song**

(10) **Patent No.: US 9,410,445 B2**
(45) **Date of Patent: Aug. 9, 2016**

(54) **CASTABLE HIGH TEMPERATURE ALUMINUM ALLOY**

(75) Inventor: **Shihong Gary Song**, South Windsor, CT (US)

(73) Assignee: **United Technologies Corporation**, Hartford, CT (US)

( * ) Notice: Subject to any disclaimer, the term of this patent is extended or adjusted under 35 U.S.C. 154(b) by 0 days.

(21) Appl. No.: **13/339,576**

(22) Filed: **Dec. 29, 2011**

(65) **Prior Publication Data**

US 2012/0111026 A1 May 10, 2012

**Related U.S. Application Data**

(63) Continuation of application No. 10/770,893, filed on Feb. 3, 2004, which is a continuation-in-part of application No. 10/061,551, filed on Feb. 1, 2002, now abandoned.

(51) **Int. Cl.**

| | |
|---|---|
| ***C22C 21/00*** | (2006.01) |
| ***F01D 25/00*** | (2006.01) |
| ***B22D 21/00*** | (2006.01) |
| ***C22F 1/04*** | (2006.01) |
| ***C22C 1/02*** | (2006.01) |

(52) **U.S. Cl.**

CPC ..... ***F01D 25/00*** (2013.01); ***B22D 21/007*** (2013.01); ***C22C 1/026*** (2013.01); ***C22C 21/00*** (2013.01); ***C22F 1/04*** (2013.01); ***F01D 25/005*** (2013.01); *F05D 2230/21* (2013.01); *F05D 2300/121* (2013.01); *Y02T 50/671* (2013.01)

(58) **Field of Classification Search**

CPC ..... C22C 1/026

USPC ..... 420/528

See application file for complete search history.

(56) **References Cited**

U.S. PATENT DOCUMENTS

| | | | | |
|---|---|---|---|---|
| 2,548,886 | A * | 4/1951 | Howard | 415/199.5 |
| 3,528,246 | A * | 9/1970 | Fischer | 60/226.1 |
| 3,807,016 | A | 4/1974 | Schoerner et al. | |
| 3,807,969 | A | 4/1974 | Schoerner et al. | |
| 3,811,846 | A | 5/1974 | Schoerner et al. | |
| 3,830,635 | A | 8/1974 | Chia et al. | |
| 4,142,365 | A * | 3/1979 | Sargisson et al. | 60/204 |
| 4,713,216 | A * | 12/1987 | Higashi et al. | 420/532 |
| 4,790,133 | A * | 12/1988 | Stuart | 60/226.1 |
| 4,806,307 | A | 2/1989 | Hirose et al. | |
| 4,832,737 | A | 5/1989 | Mathy et al. | |

(Continued)

FOREIGN PATENT DOCUMENTS

| | | |
|---|---|---|
| EP | 0958393 | 11/1999 |
| EP | 1111078 | 6/2001 |

(Continued)

OTHER PUBLICATIONS

Title 40—Protection of Environment, Sec. 86.004-11 Emission standards for 2004 and later model year diesel heavy-duty engines and vehicles.

(Continued)

*Primary Examiner* — Jessee Roe
*Assistant Examiner* — Christopher Kessler
(74) *Attorney, Agent, or Firm* — Carlson, Gaskey & Olds, P.C.

(57) **ABSTRACT**

A turbine engine includes an airfoil made of an aluminum-rare earth element alloy.
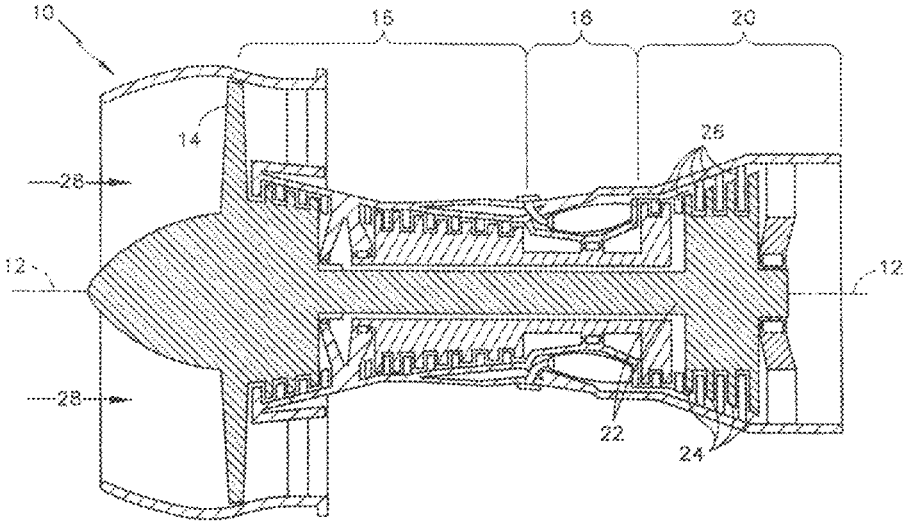
**20 Claims, 5 Drawing Sheets**