US009409045B2

(12) **United States Patent**
Berezovsky

(10) **Patent No.: US 9,409,045 B2**
(45) **Date of Patent: Aug. 9, 2016**

(54) **SOLID PROPELLANT FIRE EXTINGUISHING SYSTEM**

(75) Inventor: **Julia Berezovsky**, Mortdale (AU)

(73) Assignee: **PYROGEN MANUFACTURING SDN BHD**, Shahalam (MY)

(*) Notice: Subject to any disclaimer, the term of this patent is extended or adjusted under 35 U.S.C. 154(b) by 29 days.

(21) Appl. No.: **14/240,936**

(22) PCT Filed: **Apr. 20, 2012**

(86) PCT No.: **PCT/MY2012/000087**

§ 371 (c)(1),
(2), (4) Date: **Jun. 17, 2014**

(87) PCT Pub. No.: **WO2013/028053**

PCT Pub. Date: **Feb. 28, 2013**

(65) **Prior Publication Data**

US 2014/0305668 A1 Oct. 16, 2014

(30) **Foreign Application Priority Data**

Aug. 25, 2011 (MY) PI2011003993

(51) **Int. Cl.**

A62C 13/00	(2006.01)
A62C 13/22	(2006.01)
A62C 35/02	(2006.01)
A62C 3/07	(2006.01)

(52) **U.S. Cl.**
CPC . ***A62C 13/22*** (2013.01); ***A62C 3/07*** (2013.01); ***A62C 13/006*** (2013.01); ***A62C 35/023*** (2013.01)

(58) **Field of Classification Search**
CPC A62C 3/025; A62C 5/006; A62C 13/006; A62C 13/22; A62C 19/00; A62C 35/023; A62C 35/08
See application file for complete search history.

(56) **References Cited**

U.S. PATENT DOCUMENTS

5,393,437	A	2/1995	Bower	
5,613,562	A	3/1997	Galbraith et al.	
6,024,889	A *	2/2000	Holland et al.	252/5
6,513,602	B1 *	2/2003	Lewis et al.	169/84
6,612,243	B1 *	9/2003	Italiane et al.	102/367
2004/0216903	A1 *	11/2004	Wierenga et al.	169/85
2004/0226726	A1 *	11/2004	Holland et al.	169/62
2004/0262017	A1	12/2004	Gaidano et al.	
2007/0007019	A1 *	1/2007	Wierenga et al.	169/30
2007/0158085	A1 *	7/2007	Bourdet et al.	169/46

FOREIGN PATENT DOCUMENTS

GB	2306320	5/1997
GB	2362099	11/2001
WO	9523630	9/1995
WO	2006138733	12/2006

* cited by examiner

Primary Examiner — Ryan Reis
(74) *Attorney, Agent, or Firm* — Preston Smirman; Smirman IP Law, PLLC

(57) **ABSTRACT**

A fire extinguishing system comprises a hermetically sealed storage canister (**110**) fabricated with at least one gas outlet (**111**) and defining a hollow (**112**) within; a powder form fire extinguishing agent (**120**) stored inside the canister (**110**): a solid propellant (**130**), which is ignitable to generate gases (**135**); connected to the canister (**110**); and a rupturable seal (**140**) disposed at the gas outlet (**111**), wherein the solid propellant (**130**) generates gasses to aerate the fire extinguishing agent (**120**) inside the canister (**110**) and build a positive gas pressure until the gas pressure is sufficient to rupture the seal (**140**) for discharging the fire extinguishing agent (**120**) under pressurized gas flow (**150**).
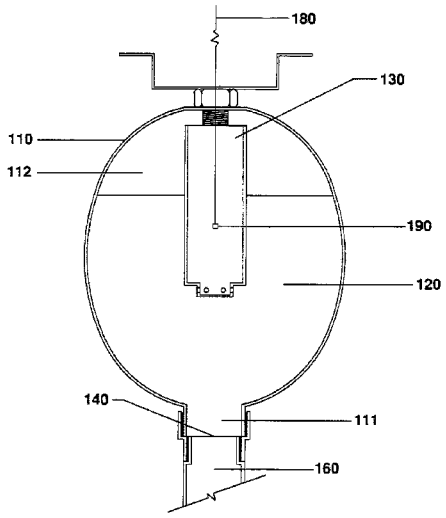
8 Claims, 4 Drawing Sheets