US009408445B2

(12) **United States Patent**
Mogil et al.

(10) **Patent No.: US 9,408,445 B2**
(45) **Date of Patent: Aug. 9, 2016**

(54) **SOFT-SIDED INSULATED CONTAINER WITH INFLATABLE WALL STRUCTURE**

(71) Applicants: **Melvin S. Mogil**, Toronto (CA); **Rick Stephens**, Chicago, IL (US); **Ryan Mather**, Boulder, CO (US)

(72) Inventors: **Melvin S. Mogil**, Toronto (CA); **Rick Stephens**, Chicago, IL (US); **Ryan Mather**, Boulder, CO (US)

(73) Assignee: **CALIFORNIA INNOVATIONS INC.** (CA)

(*) Notice: Subject to any disclaimer, the term of this patent is extended or adjusted under 35 U.S.C. 154(b) by 20 days.

(21) Appl. No.: **13/782,489**

(22) Filed: **Mar. 1, 2013**

(65) **Prior Publication Data**

US 2014/0248003 A1 Sep. 4, 2014

(51) **Int. Cl.**

B65D 81/38	(2006.01)
A45C 3/00	(2006.01)
A45C 3/04	(2006.01)
A45C 7/00	(2006.01)
A45C 11/20	(2006.01)

(52) **U.S. Cl.**

CPC . ***A45C 3/001*** (2013.01); ***A45C 3/04*** (2013.01); ***A45C 7/0081*** (2013.01); ***A45C 11/20*** (2013.01)

(58) **Field of Classification Search**

CPC B65D 81/3897; B65D 88/1681; B65D 81/051; B65D 81/052; A45C 11/20; A45C 7/0077; A45C 7/0081

USPC 383/110, 3, 111, 109, 2; 206/522

See application file for complete search history.

(56) **References Cited**

U.S. PATENT DOCUMENTS

1,372,893	A		3/1921	Miller	
2,770,275	A		11/1956	Suciu	
3,031,121	A	*	4/1962	Chase	383/13
3,339,823	A	*	9/1967	Bessermann-Nielsen	383/15
3,587,794	A		6/1971	Mattei	
3,730,240	A	*	5/1973	Presnick	383/3
4,085,785	A		4/1978	Hoot	
4,091,852	A		5/1978	Jordan et al.	
4,172,152	A	*	10/1979	Carlisle	426/127
4,211,091	A	*	7/1980	Campbell	62/372
4,387,846	A	*	6/1983	DuCorday	383/15
4,679,242	A	*	7/1987	Brockhaus	383/4
4,707,883	A	*	11/1987	Irani et al.	16/407
D328,550	S		8/1992	Mogil	
D340,387	S		10/1993	Melk	
D340,621	S		10/1993	Melk	
D340,840	S		11/1993	Melk	
5,346,309	A	*	9/1994	Book	383/4
5,354,131	A		10/1994	Mogil	
5,403,095	A		4/1995	Melk	

(Continued)

FOREIGN PATENT DOCUMENTS

CA 2149491 A1 11/1996

Primary Examiner — Jes F Pascua

(74) *Attorney, Agent, or Firm* — Ostrolenk Faber LLP

(57) **ABSTRACT**

A soft-sided insulated container assembly is made of a flexible wall structure that is movable between a collapsed position and a deployed position. In one variation of the deployed position it resembles a tote-bag; in another variation of folding the deployed position corresponds to a generally box-like shape. The container includes a self-inflating wall structure that has an inner layer or skin, an outer layer or skin, and a resilient, open-cell insulating layer trapped between the two skins. A valve governs the ability to take in or to expel air. The outer layer may be thicker and more robust that the inner layer, the better to resist abrasion or punctures. The inner layer may be reflective. There may be a removable internal liner. That liner may be transparent.
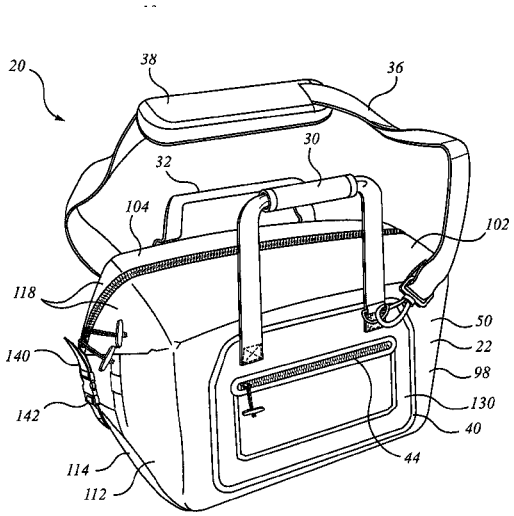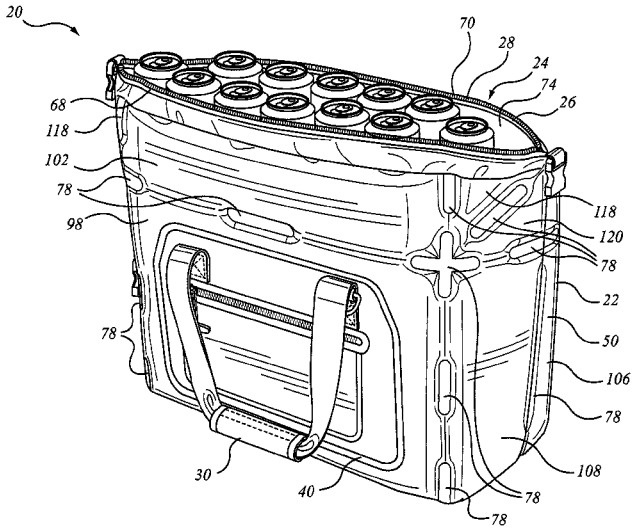
20 Claims, 6 Drawing Sheets