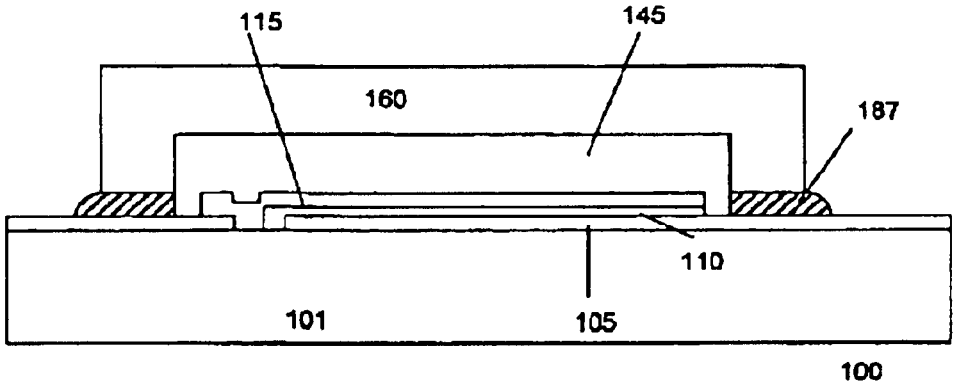

Fig. 1

Prior art