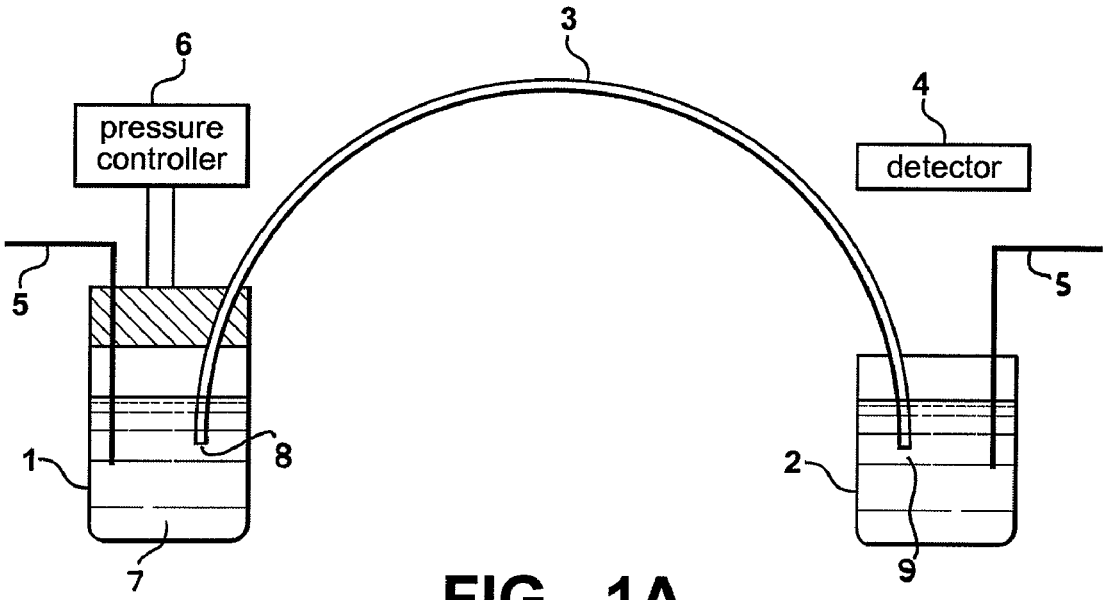
6
pressure controller
3
4
detector
5
5
1
8
2
7
9

FIG - 1A

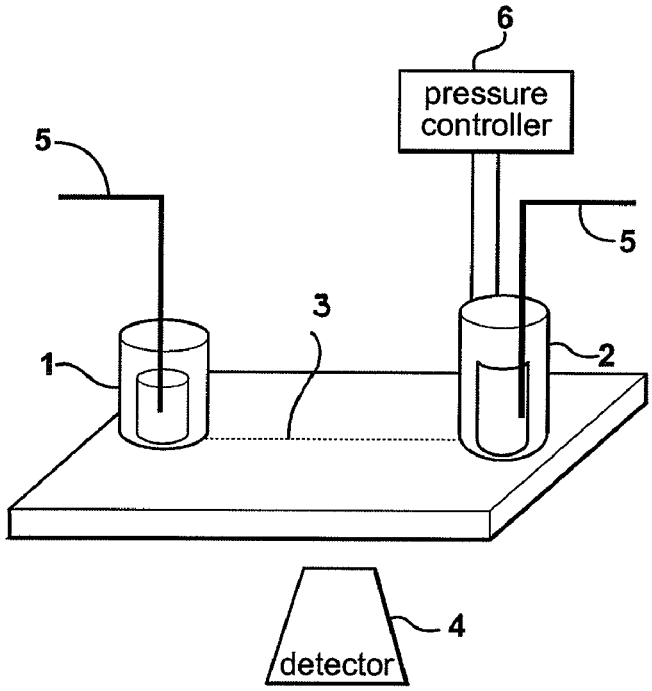
6
pressure controller
5
5
3
1
2
4
detector

FIG - 1B