US009078744B2

(12) **United States Patent**
Van Noy

(10) **Patent No.: US 9,078,744 B2**
(45) **Date of Patent: Jul. 14, 2015**

(54) **SINGLE OPTIC ACCOMMODATIVE INTRAOCULAR LENS SYSTEM**

(75) Inventor: **Stephen Van Noy**, Southlake, TX (US)

(73) Assignee: **NOVARTIS AG**, Basel (CH)

(*) Notice: Subject to any disclaimer, the term of this patent is extended or adjusted under 35 U.S.C. 154(b) by 491 days.

(21) Appl. No.: **12/699,279**

(22) Filed: **Feb. 3, 2010**

(65) **Prior Publication Data**

US 2010/0204788 A1 Aug. 12, 2010

Related U.S. Application Data

(60) Provisional application No. 61/151,552, filed on Feb. 11, 2009.

(51) **Int. Cl.**
A61F 2/16 (2006.01)

(52) **U.S. Cl.**
CPC ***A61F 2/1613*** (2013.01); ***A61F 2/1629*** (2013.01); ***A61F 2/1648*** (2013.01); ***A61F 2/1694*** (2013.01)

(58) **Field of Classification Search**
CPC A61F 2/1613–2/1632; A61F 2/1648–2002/1651; A61F 2002/1681; A61F 2220/0025; A61F 2220/0033; A61F 2220/0091; A61F 2250/0008; A61F 2250/0065
USPC 623/6.37, 6.43, 6.4, 6.41, 6.34, 6.32, 623/6.38
See application file for complete search history.

(56) **References Cited**

U.S. PATENT DOCUMENTS

4,124,905 A * 11/1978 Clark 623/6.12
4,629,462 A 12/1986 Feaster
5,716,403 A * 2/1998 Tran et al. 623/6.46
5,824,074 A * 10/1998 Koch 623/6.34
6,013,101 A * 1/2000 Israel 623/6.43
6,197,059 B1 * 3/2001 Cumming 623/6.39
6,302,911 B1 * 10/2001 Hanna 623/6.39
6,761,737 B2 * 7/2004 Zadno-Azizi et al. 623/6.37
6,972,033 B2 * 12/2005 McNicholas 623/6.37
2002/0103490 A1 8/2002 Brady
2002/0138140 A1 * 9/2002 Hanna 623/6.37
2003/0114927 A1 * 6/2003 Nagamoto 623/6.37
2003/0204255 A1 * 10/2003 Peng et al. 623/6.34
2004/0006387 A1 * 1/2004 Kelman 623/6.36
2004/0039446 A1 * 2/2004 McNicholas 623/6.37
2004/0162612 A1 * 8/2004 Portney et al. 623/6.34
2004/0236422 A1 * 11/2004 Zhang et al. 623/6.34
2006/0047339 A1 * 3/2006 Brown 623/6.13
2006/0235515 A1 10/2006 Chassain
2007/0016293 A1 * 1/2007 Tran 623/6.34
2007/0106381 A1 5/2007 Blake
(Continued)

Primary Examiner — Paul Prebilic
(74) *Attorney, Agent, or Firm* — Jason Finch

(57) **ABSTRACT**

A single-optic accommodative lens system includes two intraocular elements designed to be located within the capsular bag to extend depth of focus and/or restore accommodation following cataract extraction of a natural lens. A first intraocular element comprises a circumferential capsular ring having interlock features to couple to and control the dynamic vault response of a second intraocular element. This second intraocular element comprises an intraocular lens (IOL) having an optic and a plurality of haptics and is designed to move axially in response to changes in the geometry of the eye capsule and thus provide a range of accommodative power. The IOL further comprises interlock features complementary to the interlock features of the first intraocular element for coupling the IOL to the capsular ring in a manner that provides for controlled movement of the IOL in response to capsular forces.
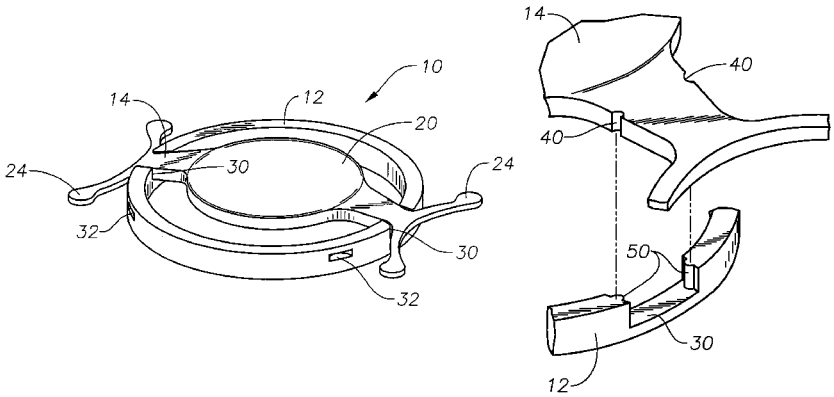
21 Claims, 4 Drawing Sheets