US005165644A

# United States Patent [19]

Allen

[11] Patent Number: 5,165,644

[45] Date of Patent: Nov. 24, 1992

[54] MOUNTING APPARATUS FOR A VIDEO DISPLAY

[76] Inventor: Thomas Allen, 7500 Telephone Rd., Newburgh, Ind. 47630

[21] Appl. No.: 735,910

[22] Filed: Jul. 25, 1991

[51] Int. Cl.[5] ..... E04G 3/00

[52] U.S. Cl. ..... 248/285; 248/919; 248/924

[58] Field of Search ..... 248/917, 919, 921, 922, 248/923, 924, 289.1, 282, 274, 447.1, 458, 670, 664, 674, 676, 131, 145.3, 415

[56] References Cited

U.S. PATENT DOCUMENTS

| | | | |
|---|---|---|---|
| 1,228,583 | 6/1917 | Mueller . | |
| 1,396,548 | 11/1921 | Bartlett | 248/282 |
| 1,870,109 | 8/1932 | Goforth . | |
| 2,867,401 | 1/1959 | Sheahan . | |
| 2,895,702 | 7/1959 | Pierce . | |
| 3,096,062 | 7/1963 | Bosshart . | |
| 3,889,910 | 6/1975 | Walters | 248/921 X |
| 3,896,576 | 7/1975 | Wolf et al. | 248/282 |
| 4,447,031 | 5/1984 | Sounder, Jr. et al. | 248/921 X |
| 4,487,389 | 12/1984 | Ziegler | 248/922 X |
| 4,616,218 | 10/1986 | Bailey et al. . | |
| 4,659,047 | 4/1987 | Haller . | |
| 4,708,312 | 11/1987 | Rohr | 248/280.1 |

FOREIGN PATENT DOCUMENTS

| | | |
|---|---|---|
| 810502 | 6/1951 | Fed. Rep. of Germany . |
| 680337 | 1/1965 | Italy . |
| 1515056 | 6/1978 | United Kingdom . |
| 2100090 | 12/1982 | United Kingdom . |

*Primary Examiner*—Ramon O. Ramirez
*Attorney, Agent, or Firm*—Wenderoth, Lind & Ponack

[57] ABSTRACT

A mounting apparatus for mounting a video display to a vertical surface has a bracket for connection to the vertical surface. A vertically extending pivot member is mounted to the bracket for pivotable movement about a substantially vertical axis. A support bar is fixed to and extends from the pivot member, and the plurality of support arms extend from the support bar in a direction substantially perpendicular to the support bar. The support arms have a number of separate support members adjustably mounted thereon for supporting separate points on a video display.
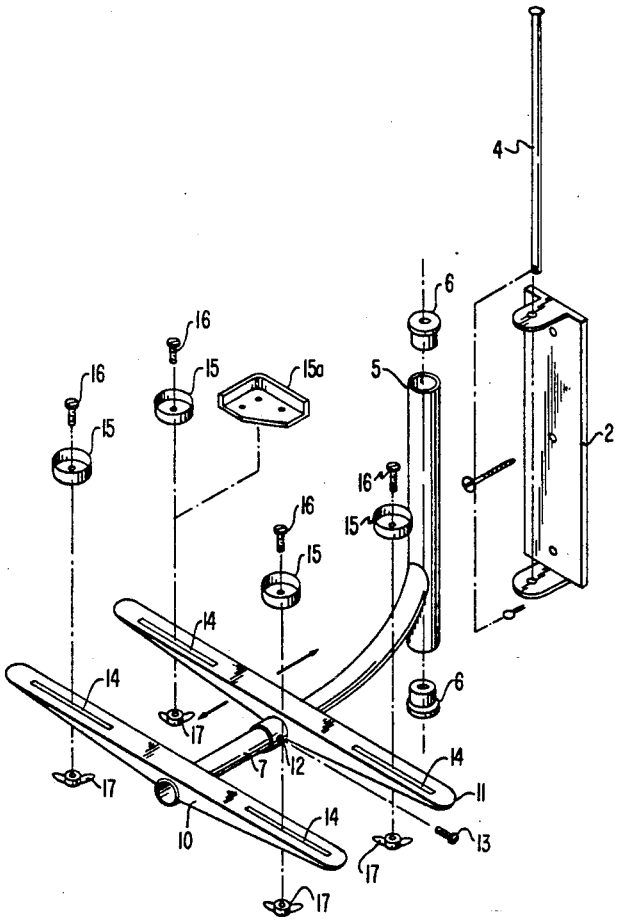
16 Claims, 7 Drawing Sheets