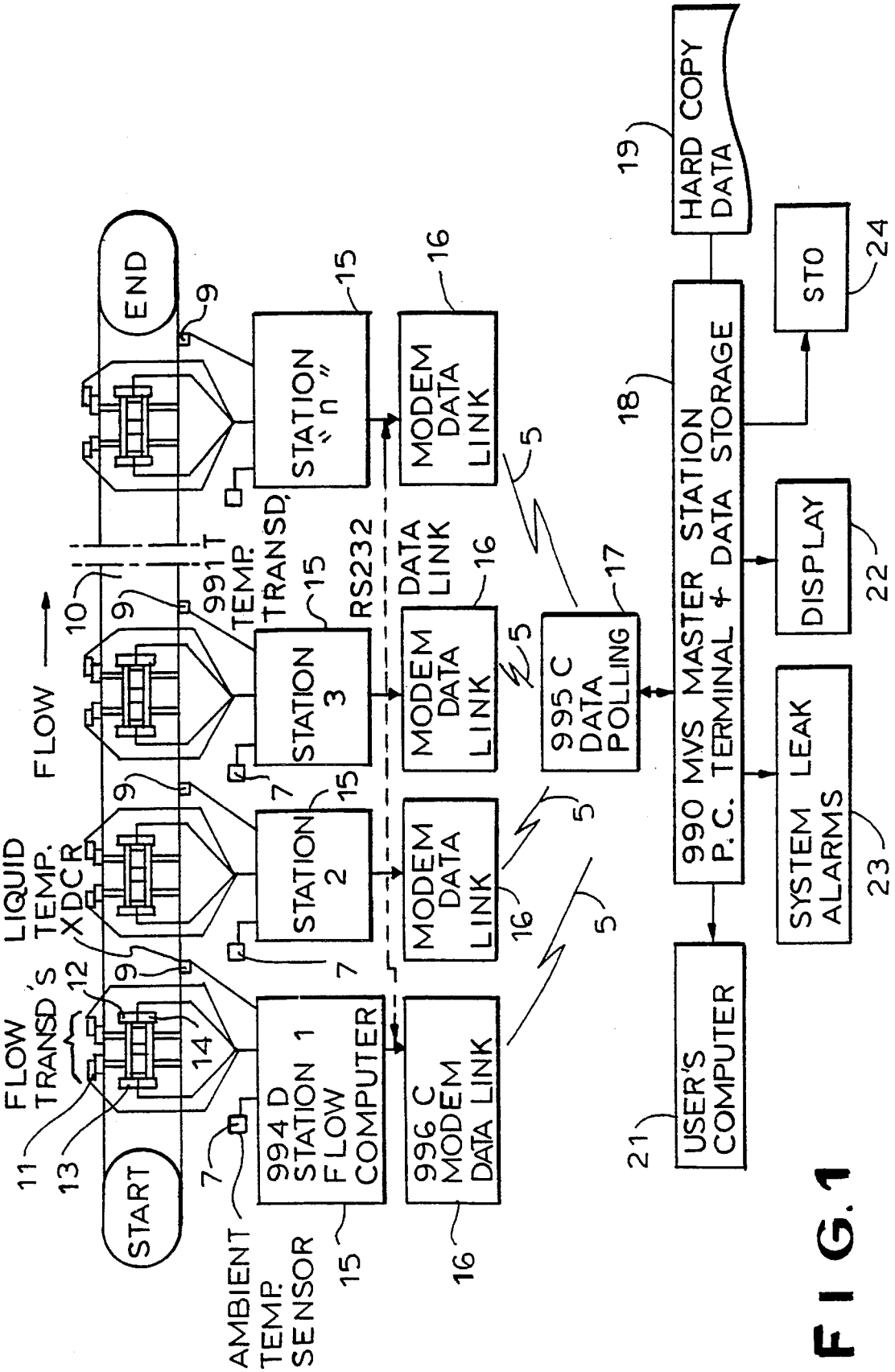
START
END
FLOW
FLOW TRANSD.'S
LIQUID TEMP. XDCR
AMBIENT TEMP. SENSOR
991 T TEMP. TRANSD.
RS232
DATA LINK
994 D STATION 1 FLOW COMPUTER
STATION 2
STATION 3
STATION "n"
996 C MODEM DATA LINK
MODEM DATA LINK
MODEM DATA LINK
MODEM DATA LINK
995 C DATA POLLING
990 MVS MASTER STATION P.C. TERMINAL + DATA STORAGE
USER'S COMPUTER
HARD COPY DATA
STO
DISPLAY
SYSTEM LEAK ALARMS
5
7
9
10
11
12
13
14
15
16
17
18
19
21
22
23
24

FIG. 1