US009636744B2

(12) **United States Patent**
Prabhu et al.

(10) **Patent No.: US 9,636,744 B2**
(45) **Date of Patent: May 2, 2017**

(54) **METHOD OF POURING MOLTEN METAL FROM A MOLTEN METAL HOLDING AND POURING BOX WITH DUAL POURING NOZZLES**

(71) Applicant: **INDUCTOTHERM CORP.**, Rancocas, NJ (US)

(72) Inventors: **Satyen N. Prabhu**, Voorhees, NJ (US); **William R. Pflug**, Mount Laurel, NJ (US); **Marcelo Albano Paiva**, Delran, NJ (US); **Graham Cooper**, Queensland (AU)

(73) Assignee: **INDUCTOTHERM CORP.**, Rancocas, NJ (US)

(*) Notice: Subject to any disclaimer, the term of this patent is extended or adjusted under 35 U.S.C. 154(b) by 0 days.

(21) Appl. No.: **15/193,080**

(22) Filed: **Jun. 26, 2016**

(65) **Prior Publication Data**

US 2016/0318098 A1 Nov. 3, 2016

Related U.S. Application Data

(62) Division of application No. 13/533,414, filed on Jun. 26, 2012, now Pat. No. 9,375,785.

(60) Provisional application No. 61/501,235, filed on Jun. 26, 2011.

(51) **Int. Cl.**

B22D 41/50	(2006.01)
B22D 41/08	(2006.01)
B22D 37/00	(2006.01)
B22D 41/16	(2006.01)
B22D 41/18	(2006.01)
B22D 23/00	(2006.01)
B22D 41/54	(2006.01)

(52) **U.S. Cl.**

CPC ***B22D 41/08*** (2013.01); ***B22D 23/00*** (2013.01); ***B22D 37/00*** (2013.01); ***B22D 41/16*** (2013.01); ***B22D 41/18*** (2013.01); ***B22D 41/50*** (2013.01); ***B22D 41/54*** (2013.01); *Y10T 29/4973* (2015.01)

(58) **Field of Classification Search**

CPC B22D 41/08; B22D 41/54
USPC 266/236, 44
See application file for complete search history.

(56) **References Cited**

U.S. PATENT DOCUMENTS

2010/0282784	A1	11/2010	Paiva et al.	
2011/0204103	A1	8/2011	Tofuke et al.	
2016/0303648	A1*	10/2016	Prabhu	B22D 37/00
2016/0318098	A1*	11/2016	Prabhu	B22D 37/00

FOREIGN PATENT DOCUMENTS

JP	H1058100	A	3/1998
JP	H11-245017	A	9/1999
JP	2003164961	A	6/2003
JP	2005028429	A	2/2005
WO	00/13822	A1	3/2000

* cited by examiner

Primary Examiner — Scott Kastler
(74) *Attorney, Agent, or Firm* — Philip O. Post

(57) **ABSTRACT**

A method of pouring molten metal from a molten metal holding and pouring box with a rectangular-shaped upper section and a pyramidal-shaped lower section provides a relatively constant flow of molten metal being poured from the box through each of two bottom nozzles into two separate foundry molds at the same time.
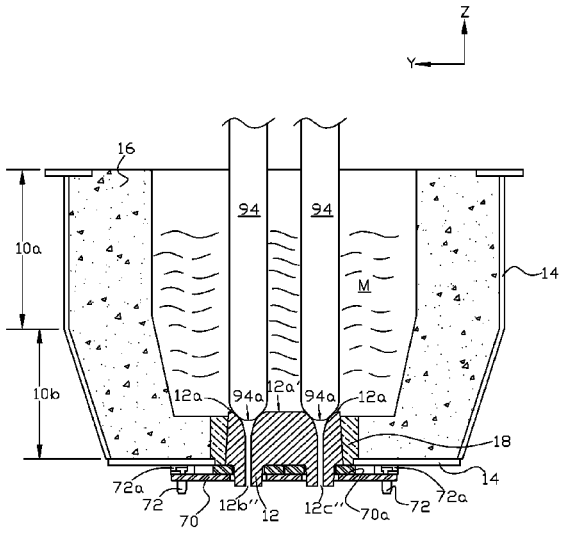
9 Claims, 9 Drawing Sheets