US009636644B2

(12) **United States Patent**
Pradel et al.

(10) **Patent No.: US 9,636,644 B2**
(45) **Date of Patent: May 2, 2017**

(54) **AERATION DEVICE FOR BIOREACTORS**

(75) Inventors: **Guenter Pradel**, Goettingen (DE); **Stefan Weisshaar**, Adelebsen (DE); **Gerhard Greller**, Goettingen (DE); **Ute Husemann**, Goettingen (DE)

(73) Assignee: **SARTORIUS STEDIM BIOTECH GMBH**, Goettingen (DE)

(*) Notice: Subject to any disclaimer, the term of this patent is extended or adjusted under 35 U.S.C. 154(b) by 251 days.

(21) Appl. No.: **13/508,074**

(22) PCT Filed: **Oct. 28, 2010**

(86) PCT No.: **PCT/EP2010/006601**

§ 371 (c)(1),
(2), (4) Date: **May 4, 2012**

(87) PCT Pub. No.: **WO2011/057718**

PCT Pub. Date: **May 19, 2011**

(65) **Prior Publication Data**

US 2012/0313267 A1 Dec. 13, 2012

(30) **Foreign Application Priority Data**

Nov. 12, 2009 (DE) 10 2009 052 670

(51) **Int. Cl.**
B01F 3/04 (2006.01)
C12M 1/00 (2006.01)

(52) **U.S. Cl.**
CPC ***B01F 3/04531*** (2013.01); ***B01F 3/04262*** (2013.01); ***C12M 29/06*** (2013.01); *B01F 3/04099* (2013.01); *B01F 3/04106* (2013.01); *B01F 2003/04673* (2013.01)

(58) **Field of Classification Search**
CPC B01F 2003/04148; B01F 3/04106; B01F 3/04262; B01F 2003/04326; B01F 3/04248; B01F 2003/04283; B01F 2003/04354; B01F 2003/04361; B01F 2003/04368; B01F 2003/0439; B01F 2003/04297; B01F 3/04531; B01F 2003/04673; B01F 3/04099; C12M 29/06
USPC 261/124
See application file for complete search history.

(56) **References Cited**

U.S. PATENT DOCUMENTS

3,953,554 A * 4/1976 Loughridge 261/124
4,165,286 A * 8/1979 Schreiber B01F 3/04269 210/220
4,207,275 A * 6/1980 Stanton, Jr. B01F 3/04262 210/221.2
4,521,349 A * 6/1985 Weber B01F 3/04262 209/169

(Continued)

FOREIGN PATENT DOCUMENTS

BE WO 2007134267 A2 * 11/2007 ..... B01F 3/04269
DE 813 995 9/1951

(Continued)

Primary Examiner — Amber R Orlando
Assistant Examiner — Stephen Hobson
(74) *Attorney, Agent, or Firm* — Gerald E. Hespos; Michael J. Porco; Matthew T. Hespos

(57) **ABSTRACT**

Aeration device for bioreactors with a first aeration element with gas outlet openings of a first size and with at least one second aeration element with gas outlet openings of a second size, the aeration elements being formed by a common housing with separate aeration channels.
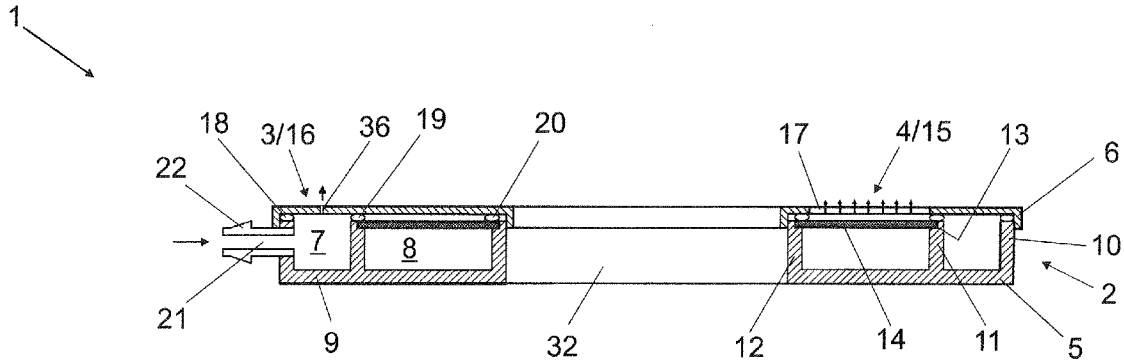
15 Claims, 6 Drawing Sheets