Nov. 28, 1933. G. T. SCHRODER 1,936,644

INSECT TRAP

Filed June 3, 1929

Fig. 1.

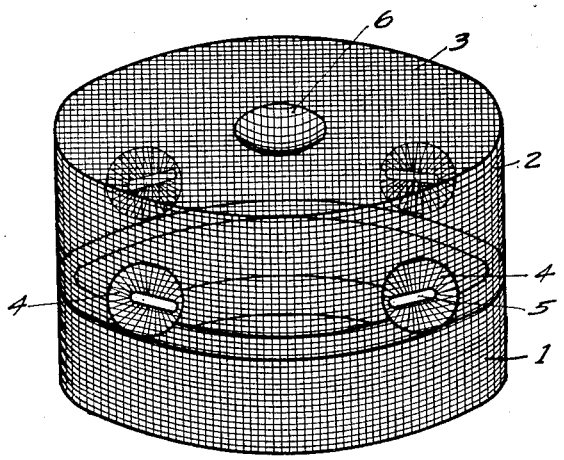

Fig. 2.

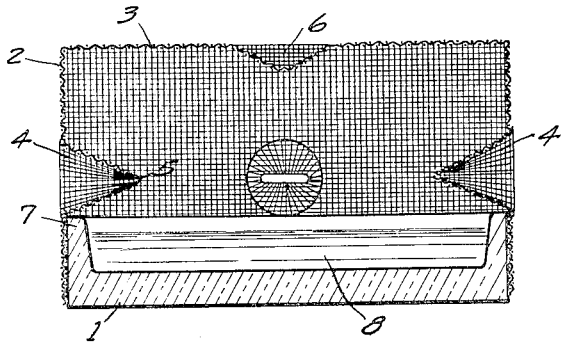

Fig. 3.

INVENTOR
George T. Schroder
BY
Wm. T. Nedlund
his ATTORNEY