May 29, 1962 R. W. COCHRAN 3,036,444

METHODS OF AND APPARATUS FOR AIR CONDITIONING

Filed Jan. 26, 1959

Fig. 1

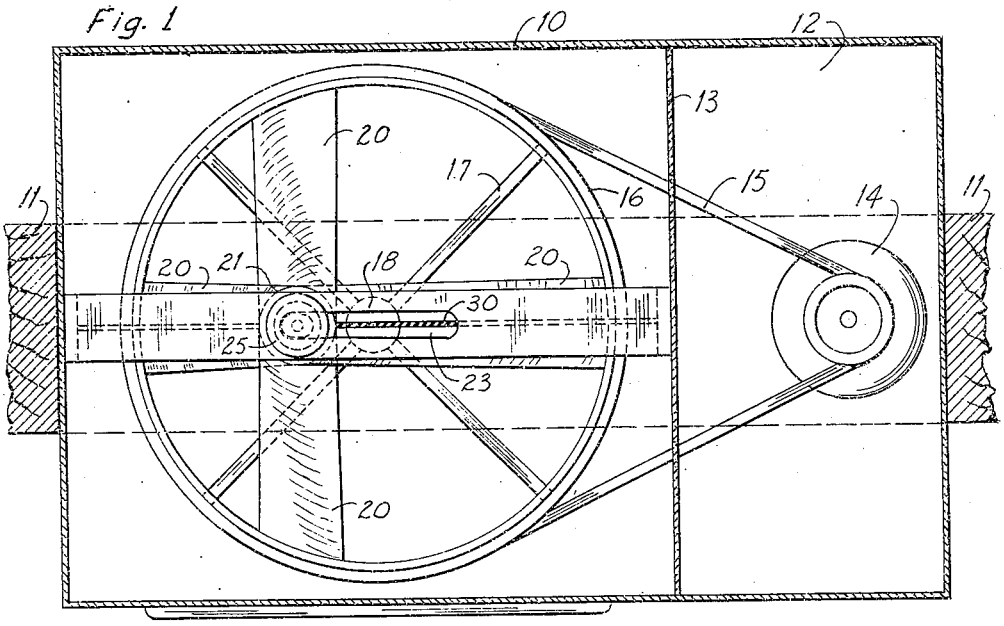

Fig. 2

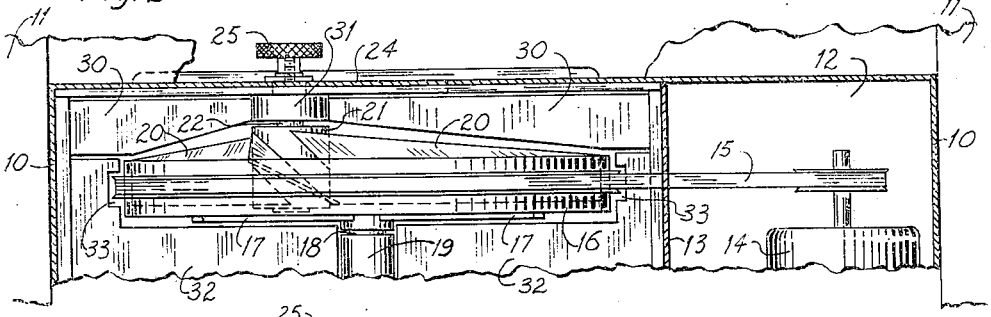

Fig. 3

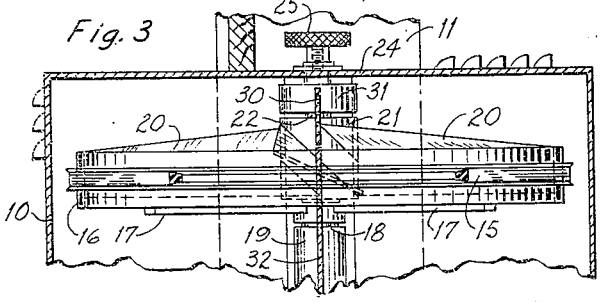

Robert W. Cochran
INVENTOR.

BY A. T. Spence
ATTORNEY