US007735644B2

(12) **United States Patent**
Sirichai et al.

(10) **Patent No.: US 7,735,644 B2**
(45) **Date of Patent: Jun. 15, 2010**

(54) **CASE FOR ELECTRICAL DEVICE AND METHOD OF USING SAME**

(75) Inventors: **Saharut Sirichai**, Hong Kong (HK); **Xin Fu**, Shanghai (CN)

(73) Assignee: **Belkin International, Inc.**, Playa Vista, CA (US)

(*) Notice: Subject to any disclaimer, the term of this patent is extended or adjusted under 35 U.S.C. 154(b) by 142 days.

(21) Appl. No.: **11/810,823**

(22) Filed: **Jun. 6, 2007**

(65) **Prior Publication Data**

US 2008/0302687 A1 Dec. 11, 2008

(51) **Int. Cl.**
B65D 85/00 (2006.01)

(52) **U.S. Cl.** **206/320**; 206/45.24; 206/45.2

(58) **Field of Classification Search** 206/320, 206/701, 305, 37, 38, 760, 759, 45.2, 45.24; 224/930, 929; 361/683–686, 679, 600; 150/165; 248/444.1, 454–457, 447–448, 459
See application file for complete search history.

(56) **References Cited**

U.S. PATENT DOCUMENTS

1,659,395	A *	2/1928	Douglas	402/70
1,863,047	A *	6/1932	Grimsley	206/760
3,769,741	A *	11/1973	Hessler et al.	206/750
4,213,520	A *	7/1980	Sarna et al.	248/444.1
4,259,568	A *	3/1981	Dynesen	206/305
4,400,161	A *	8/1983	Gerlt	206/760
4,467,551	A *	8/1984	Pulver	206/315.1
4,544,123	A *	10/1985	Peacock	248/460
4,663,880	A *	5/1987	Grobl	43/17.6
4,703,161	A *	10/1987	McLean	361/680
4,896,805	A	1/1990	Klaczak et al.	
5,607,054	A *	3/1997	Hollingsworth	206/320
5,887,723	A *	3/1999	Myles et al.	206/320
5,913,683	A *	6/1999	Rahmoune et al.	434/104
6,604,618	B1 *	8/2003	Godshaw et al.	206/320
6,697,045	B2 *	2/2004	Min	345/156
7,104,516	B2 *	9/2006	Uto et al.	248/688
2005/0098594	A1 *	5/2005	Truong	224/275
2005/0247584	A1 *	11/2005	Lu	206/320
2006/0243772	A1	11/2006	Sirichai et al.	

OTHER PUBLICATIONS

U.S. Appl. No. 11/706,664, filed Feb. 12, 2007, James Chan.
U.S. Appl. No. 11/391,796, filed Mar. 28, 2006, Sirichai et al.

* cited by examiner

Primary Examiner—Ehud Gartenberg
Assistant Examiner—Andrew Perreault
(74) *Attorney, Agent, or Firm*—Bryan Cave LLP

(57) **ABSTRACT**

A case (**100**) for an electrical device includes: (a) a first portion (**110**) with a bottom surface (**111**); (b) a second portion (**121**) adjacent to the first portion; (c) a third portion (**122**) adjacent to the second portion; (d) a fourth portion (**123**) adjacent to the third portion; and (e) a fifth portion (**132**) with an interior surface (**235**) and adjacent to the fourth portion. In this embodiment, at least one of the first portion or the third portion is configured to be removably coupled to the electrical device. Additionally, when the case placed in an open configuration, the first portion is capable of being located over the fifth portion with the bottom surface of the first portion adjacent to the interior surface of the fifth portion.
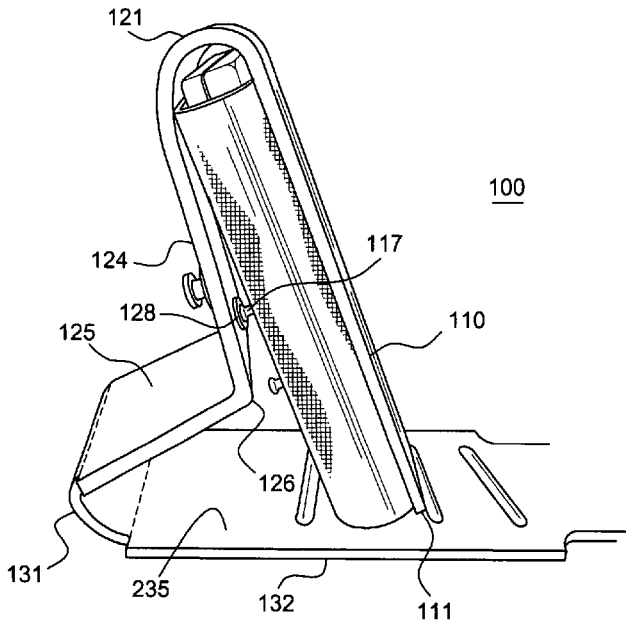
16 Claims, 6 Drawing Sheets