US007320844B2

(12) **United States Patent**
Skyllas-Kazacos

(10) **Patent No.: US 7,320,844 B2**
(45) **Date of Patent: *Jan. 22, 2008**

(54) **VANADIUM/POLYHALIDE REDOX FLOW BATTERY**

(75) Inventor: **Maria Skyllas-Kazacos**, Sylvania Heights (AU)

(73) Assignee: **Newsouth Innovations Pty Limited**, Sydney, Wales (AU)

(*) Notice: Subject to any disclaimer, the term of this patent is extended or adjusted under 35 U.S.C. 154(b) by 624 days.

This patent is subject to a terminal disclaimer.

(21) Appl. No.: **10/487,135**

(22) PCT Filed: **Aug. 26, 2002**

(86) PCT No.: **PCT/AU02/01157**

§ 371 (c)(1),
(2), (4) Date: **Jul. 13, 2004**

(87) PCT Pub. No.: **WO03/019714**

PCT Pub. Date: **Mar. 6, 2003**

(65) **Prior Publication Data**

US 2004/0234843 A1 Nov. 25, 2004

(30) **Foreign Application Priority Data**

Aug. 24, 2001 (AU) PR7221

(51) **Int. Cl.**
H01M 8/20 (2006.01)
H01M 10/36 (2006.01)

(52) **U.S. Cl.** **429/105**; 429/199; 429/302

(58) **Field of Classification Search** 429/105, 429/199, 302

See application file for complete search history.

(56) **References Cited**

U.S. PATENT DOCUMENTS

3,057,760	A *	10/1962	Dereska et al.	429/110
3,996,064	A	12/1976	Thaller	
4,107,401	A *	8/1978	Goodson et al.	429/105 X
4,786,567	A *	11/1988	Skyllas-Kazacos et al.	429/105 X
6,143,443	A	11/2000	Kazacos et al.	
6,720,107	B1 *	4/2004	Holtom et al.	429/105
2005/0244707	A1 *	11/2005	Skyllas-Kazacos et al.	429/105

FOREIGN PATENT DOCUMENTS

EP	0566019	1/1996
WO	WO 89/05528	6/1989

* cited by examiner

Primary Examiner—Stephen J. Kalafut
(74) *Attorney, Agent, or Firm*—Welsh & Katz, Ltd.

(57) **ABSTRACT**

The invention relates to a redox flow cell containing a polyhalide/halide redox couple in the positive half-cell electrolyte and a V(III)/V(II) redox couple in the negative half-cell electrolyte. The invention also relates to a method of producing electricity by discharging the fully charged or partially charged redox flow cell, and a method of charging the discharged or partially discharged redox flow cell.
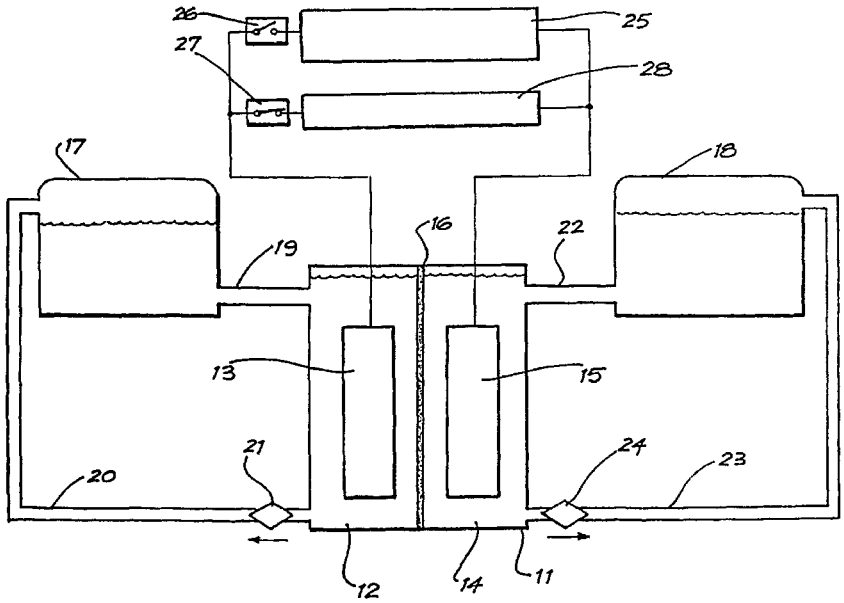
12 Claims, 5 Drawing Sheets