US008918144B2

(12) **United States Patent**
Shu

(10) **Patent No.: US 8,918,144 B2**
(45) **Date of Patent: Dec. 23, 2014**

(54) **PERSONAL COMPUTER WITH DETACHABLE WIRELESS TELEPHONE**

(76) Inventor: **Paul Shu**, Fremont, CA (US)

(*) Notice: Subject to any disclaimer, the term of this patent is extended or adjusted under 35 U.S.C. 154(b) by 229 days.

(21) Appl. No.: **13/543,573**

(22) Filed: **Jul. 6, 2012**

(65) **Prior Publication Data**

US 2013/0288747 A1 Oct. 31, 2013

Related U.S. Application Data

(60) Provisional application No. 61/640,364, filed on Apr. 30, 2012.

(51) **Int. Cl.**
H04B 1/38 (2006.01)

(52) **U.S. Cl.**
USPC **455/558**

(58) **Field of Classification Search**
CPC H04W 88/00; H04W 88/02; H04W 92/02; H04W 92/16; H04M 2250/14; H04M 1/026; G06F 21/34
USPC 455/558
See application file for complete search history.

(56) **References Cited**

U.S. PATENT DOCUMENTS

D344,074	S	2/1994	Collins	
5,625,673	A *	4/1997	Grewe et al.	455/556.2
6,240,302	B1 *	5/2001	Harrison	455/556.1
6,625,471	B2 *	9/2003	Mori et al.	455/557
6,757,551	B2	6/2004	Newman et al.	
7,107,072	B1 *	9/2006	Smith	455/556.2
8,060,139	B2 *	11/2011	Yaqub et al.	455/558
2001/0031645	A1	10/2001	Jarrett	
2004/0235522	A1	11/2004	Lin	
2005/0159184	A1	7/2005	Kerner et al.	
2008/0113687	A1 *	5/2008	Prendergast et al.	455/558
2009/0209287	A1	8/2009	Ravelo	
2010/0035650	A1 *	2/2010	Gottehrer et al.	455/558
2011/0092252	A1	4/2011	Besay	
2011/0319132	A1 *	12/2011	Hsu	455/558
2012/0034933	A1	2/2012	Bradley	
2012/0196654	A1 *	8/2012	Jin et al.	455/558

FOREIGN PATENT DOCUMENTS

WO	WO 2004/021715	A2	3/2004
WO	WO 2005/015931	A1	2/2005
WO	WO 2010/123334	A1	10/2010

* cited by examiner

Primary Examiner — Marisol Figueroa
(74) *Attorney, Agent, or Firm* — GSS Law Group

(57) **ABSTRACT**

A Subscriber Identification Module (SIM) card enclosure is formed with an internal cavity adapted to receive a SIM card and a cellular transceiver. A wireless telephone is adapted for docking with the SIM card enclosure. A personal computer includes a docking receptacle for holding the SIM card enclosure and wireless telephone. The personal computer may communicate over a cellular telephone network when the SIM card enclosure is docked to the personal computer. The wireless telephone may conduct voice calls over a wireless link with the personal computer when the wireless telephone is undocked from both the personal computer and SIM card enclosure. The wireless telephone may communicate over a cellular telephone network when the SIM card enclosure is docked to the wireless telephone. Voice communications between the wireless telephone and personal computer may be conducted concurrently with data communications between the personal computer and the cellular telephone network.
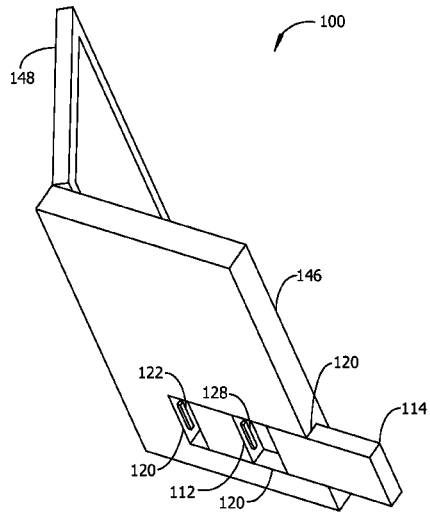
17 Claims, 10 Drawing Sheets