US009410544B2

(12) **United States Patent**
Kuttler et al.

(10) **Patent No.: US 9,410,544 B2**
(45) **Date of Patent: Aug. 9, 2016**

(54) **CHARGED HYDRAULIC SYSTEM**

(71) Applicant: **Sauer-Danfoss ApS**, Nordborg (DK)

(72) Inventors: **Onno Kuttler**, Cousland/Dalkeith (GB); **Luke Wadsley**, Edinburgh (GB); **Michael D. Gandrud**, Ames, IA (US); **Pierre Joly**, Edinburgh (GB)

(73) Assignee: **Danfoss Power Solutions ApS**, Nordborg (DK)

(*) Notice: Subject to any disclaimer, the term of this patent is extended or adjusted under 35 U.S.C. 154(b) by 823 days.

(21) Appl. No.: **13/659,512**

(22) Filed: **Oct. 24, 2012**

(65) **Prior Publication Data**

US 2013/0047600 A1 Feb. 28, 2013

Related U.S. Application Data

(63) Continuation-in-part of application No. 12/261,195, filed on Oct. 30, 2008.

(30) **Foreign Application Priority Data**

Nov. 1, 2007 (EP) 07254336

(51) **Int. Cl.**

F15B 21/04	(2006.01)
F04B 23/08	(2006.01)
F04B 1/14	(2006.01)
F04B 7/00	(2006.01)
F04B 23/10	(2006.01)
F04B 23/14	(2006.01)
F04B 49/24	(2006.01)

(52) **U.S. Cl.**

CPC ***F04B 23/08*** (2013.01); ***F04B 1/145*** (2013.01); ***F04B 7/0076*** (2013.01); ***F04B 23/103*** (2013.01); ***F04B 23/106*** (2013.01); ***F04B 23/14*** (2013.01); ***F04B 49/243*** (2013.01); *F15B 2211/20592* (2013.01)

(58) **Field of Classification Search**

CPC F15B 2211/20592

See application file for complete search history.

(56) **References Cited**

U.S. PATENT DOCUMENTS

3,945,208	A *	3/1976	O'Connor	60/420
5,615,553	A *	4/1997	Lourigan	60/422
5,775,103	A *	7/1998	Ingvast	60/453
5,943,861	A	8/1999	Davison et al.	
6,196,806	B1 *	3/2001	Van Der Sluis	417/62
6,651,545	B2	11/2003	Nippert	
6,962,050	B2 *	11/2005	Hiraki et al.	60/414
7,007,468	B1	3/2006	Bennett et al.	
2006/0218913	A1	10/2006	Ivantysynova et al.	

* cited by examiner

Primary Examiner — F. Daniel Lopez
(74) *Attorney, Agent, or Firm* — McCormick, Paulding & Huber LLP

(57) **ABSTRACT**

In open-circuit hydraulic systems (**1**), the cross-sections of the supply lines (**6**) and input valves of the hydraulic pump (**3**) have to be large, so that sufficient flow flux can be provided. This hinders a reduction of the size of the pump and the whole hydraulic system. It is suggested that the supply flow (**7**) of a hydraulic pump (**3**) is charged by a second, charging pump (**2**), to a mid-pressure level (**7**). The cross-sections of the supply flow areas can thus be decreased.
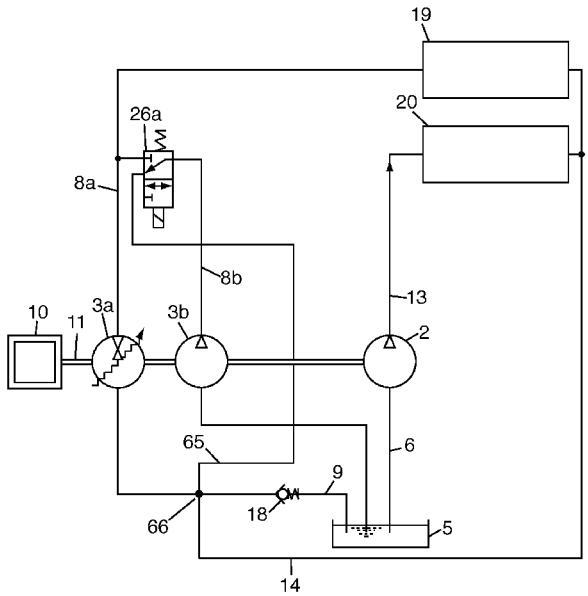
13 Claims, 10 Drawing Sheets