US009410444B2

(12) **United States Patent**
Bacic

(10) **Patent No.: US 9,410,444 B2**
(45) **Date of Patent: Aug. 9, 2016**

(54) **SHAFT BREAK DETECTION**

(71) Applicant: **ROLLS-ROYCE PLC**, London (GB)

(72) Inventor: **Marko Bacic**, Oxford (GB)

(73) Assignee: **ROLLS-ROYCE plc**, London (GB)

(*) Notice: Subject to any disclaimer, the term of this patent is extended or adjusted under 35 U.S.C. 154(b) by 811 days.

(21) Appl. No.: **13/667,220**

(22) Filed: **Nov. 2, 2012**

(65) **Prior Publication Data**

US 2013/0133333 A1 May 30, 2013

(30) **Foreign Application Priority Data**

Nov. 29, 2011 (GB) 1120511.9

(51) **Int. Cl.**

F01D 21/04	(2006.01)
F01D 17/04	(2006.01)
F01D 17/06	(2006.01)
F01D 17/08	(2006.01)
F01D 21/00	(2006.01)

(52) **U.S. Cl.**

CPC ***F01D 21/04*** (2013.01); ***F01D 17/04*** (2013.01); ***F01D 17/06*** (2013.01); ***F01D 17/08*** (2013.01); ***F01D 17/085*** (2013.01); ***F01D 21/003*** (2013.01); ***F01D 21/045*** (2013.01)

(58) **Field of Classification Search**

CPC F01D 17/04; F01D 17/06; F01D 17/08; F01D 17/085; F01D 21/04; F01D 21/003; F01D 21/045; F01D 21/06; F01D 21/14; F05D 2270/304; F05D 2270/09; F05D 2270/091; F05D 2270/021; F05D 2270/3013

See application file for complete search history.

(56) **References Cited**

U.S. PATENT DOCUMENTS

5,363,317	A *	11/1994	Rice et al.	702/34
6,176,074	B1 *	1/2001	Thompson et al.	60/773
6,494,046	B1 *	12/2002	Hayess	60/779

FOREIGN PATENT DOCUMENTS

GB	2 256 486	A	12/1992
WO	WO 94/10619	A1	5/1994
WO	WO 99/64727	A1	12/1999
WO	WO 00/36280	A1	6/2000

OTHER PUBLICATIONS

Dec. 30, 2011 British Search Report issued in British Patent Application No. GB1120511.9.

* cited by examiner

Primary Examiner — Richard Edgar
Assistant Examiner — Brian P Wolcott
(74) *Attorney, Agent, or Firm* — Oliff PLC

(57) **ABSTRACT**

The present invention provides a method of detecting shaft break in a shaft system comprising a shaft coupled between two masses. The method comprises a number of steps. Firstly, to define a time-dependent rotational speed equation for the shaft in terms of system inertia for an engine transient event. Then to discretize the rotational speed equation in terms of a discrete time constant in the discrete domain. Then to recursively define the discretized equation to give a recursive equation and to solve the recursive equation to determine the discrete time constant. Then to define a threshold as a function of engine power and then to set a shaft break signal to TRUE if the discrete time constant is greater than the threshold. A shaft break detection system is also provided by the present invention.
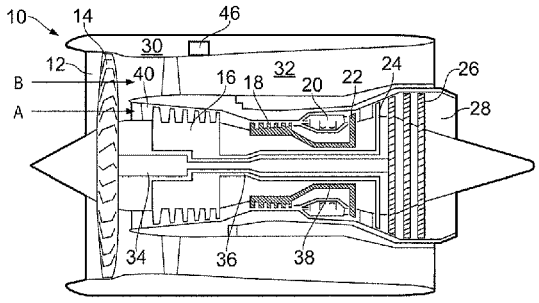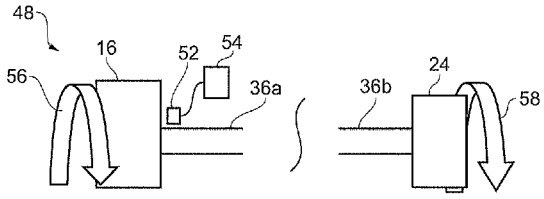
18 Claims, 4 Drawing Sheets