US009410344B2

(12) **United States Patent**
Stacey et al.

(10) **Patent No.: US 9,410,344 B2**
(45) **Date of Patent: Aug. 9, 2016**

(54) **PROTECTIVE CASE FOR PHYSICALLY SECURING A PORTABLE ELECTRONIC DEVICE**

(75) Inventors: **Jonathan Stacey**, Vancouver (CA); **Jonathan Corpuz**, Fremont, CA (US); **Dominic Peralta**, San Mateo, CA (US); **Stephen Myers**, Redwood City, CA (US)

(73) Assignee: **ACCO Brands Corporation**, Lake Zurich, IL (US)

(*) Notice: Subject to any disclaimer, the term of this patent is extended or adjusted under 35 U.S.C. 154(b) by 637 days.

(21) Appl. No.: **13/450,817**

(22) Filed: **Apr. 19, 2012**

(65) **Prior Publication Data**

US 2012/0318711 A1 Dec. 20, 2012

Related U.S. Application Data

(60) Provisional application No. 61/496,983, filed on Jun. 14, 2011.

(51) **Int. Cl.**
E05B 69/00 (2006.01)
E05B 73/00 (2006.01)

(52) **U.S. Cl.**
CPC ***E05B 73/0082*** (2013.01); *E05B 73/0005* (2013.01); *Y10T 29/49947* (2015.01)

(58) **Field of Classification Search**
CPC . E05B 73/00; E05B 73/0017; E05B 73/0023; E05B 73/0082; E05B 67/00; E05B 67/06; E05B 67/24
USPC 70/57, 57.1, 58, 63
See application file for complete search history.

(56) **References Cited**

U.S. PATENT DOCUMENTS

2,460,474	A *	2/1949	Soref	E05B 67/24 70/367
2,489,484	A *	11/1949	Dyson	E05B 67/24 70/370
2,673,458	A *	3/1954	Schlage	E05B 67/24 70/370
4,005,279	A	1/1977	Richter	
4,252,007	A	2/1981	Kerley	
4,471,409	A	9/1984	Dittrich	
4,667,491	A	5/1987	Lokken et al.	
4,884,420	A	12/1989	Finkel et al.	

(Continued)

FOREIGN PATENT DOCUMENTS

DE 20 2010 011 923 U1 1/2011

OTHER PUBLICATIONS

International Search Report and Written Opinion of PCT/US2012/039414 mailed on Aug. 7, 2012, 8 pages.

(Continued)

Primary Examiner — Christopher Boswell
(74) *Attorney, Agent, or Firm* — Michael Best & Friedrich LLP

(57) **ABSTRACT**

In some embodiments of the invention, a security apparatus for a portable electronic device is provided. The security apparatus may include a plurality of interlocking shell portions, wherein the interlocking shell portions are shaped to, when interlocked, wrap around at least part of a perimeter of the portable electronic device, and wherein at least two shell portions comprise an aperture. The security apparatus may also include an attachment device configured to be at least partly inserted into the apertures of the at least two shell portions.
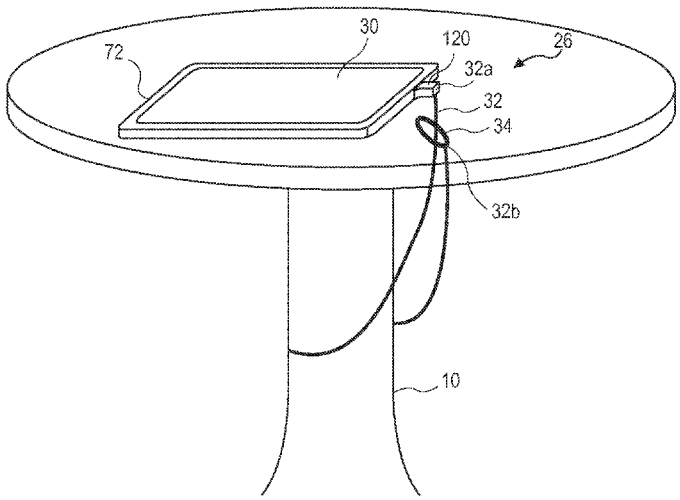
18 Claims, 9 Drawing Sheets