United States Patent [19]

Hubbard

[11] **Patent Number: 4,506,344**

[45] **Date of Patent: Mar. 19, 1985**

[54] **HAND HELD ELECTRONIC POSTAGE METER HAVING SECURE POSTAGE METER DOORS**

[75] Inventor: **David W. Hubbard**, Stamford, Conn.

[73] Assignee: **Pitney Bowes Inc.**, Stamford, Conn.

[21] Appl. No.: **384,852**

[22] Filed: **Jun. 4, 1982**

[51] **Int. Cl.**[3] **G07B 17/04**

[52] **U.S. Cl.** **364/900**; 235/101; 364/708

[58] **Field of Search** ..... 364/900 MS File, 708; 194/DIG. 8; 235/101

[56] **References Cited**

U.S. PATENT DOCUMENTS

Re. 31,441	11/1983	Nutting et al.	273/121 A
1,013,116	1/1912	Blum	101/111
3,521,555	7/1970	Price et al.	101/103
3,524,406	8/1970	Traynor	235/101 X
3,598,948	8/1971	Bowen et al.	200/159 R
3,731,068	5/1973	Hanson	235/101
3,978,457	8/1976	Check, Jr. et al.	364/200
4,053,735	10/1977	Foudos	235/419
4,168,533	9/1979	Schwartz	364/900
4,178,847	12/1979	Erhardt	101/35
4,287,825	9/1981	Eckert, Jr. et al.	101/45
4,363,485	12/1982	Edwall	273/121 A
4,372,694	2/1983	Bovio et al.	364/708 X
4,471,441	9/1984	Check, Jr.	364/900 X

Primary Examiner—Jerry Smith
Assistant Examiner—Clark A. Jablon
Attorney, Agent, or Firm—David E. Pitchenik; Albert W. Scribner; William D. Soltow, Jr.

[57] **ABSTRACT**

A pair of tamper proof postage meter doors which remain closed and locked until the proper combination of numbers is entered using the normal postage keyboard. The doors will not function if there is insufficient postage in the accounting registers. Means are also provided which will cause the ascending and descending registers in the postage meter to indicate zero postage remaining in the meter if an attempt is made to tamper with or force open the doors.
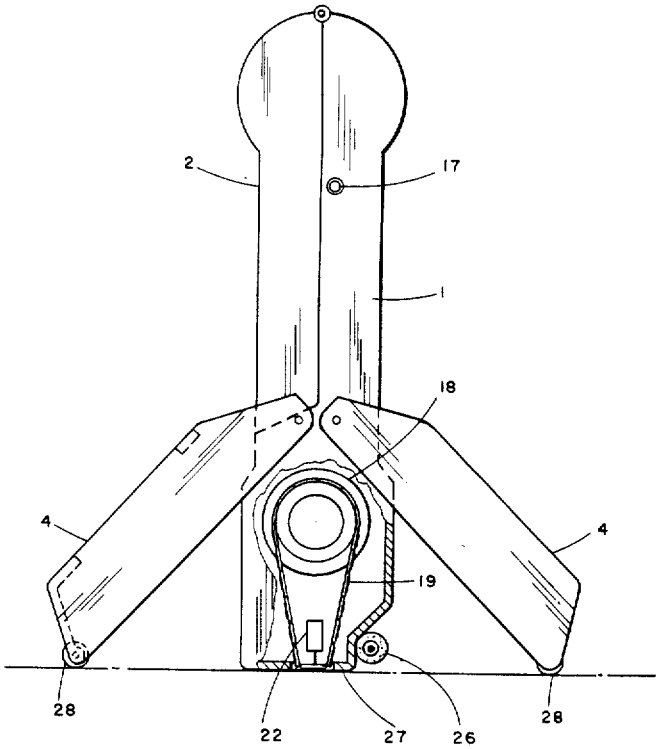
11 Claims, 5 Drawing Figures