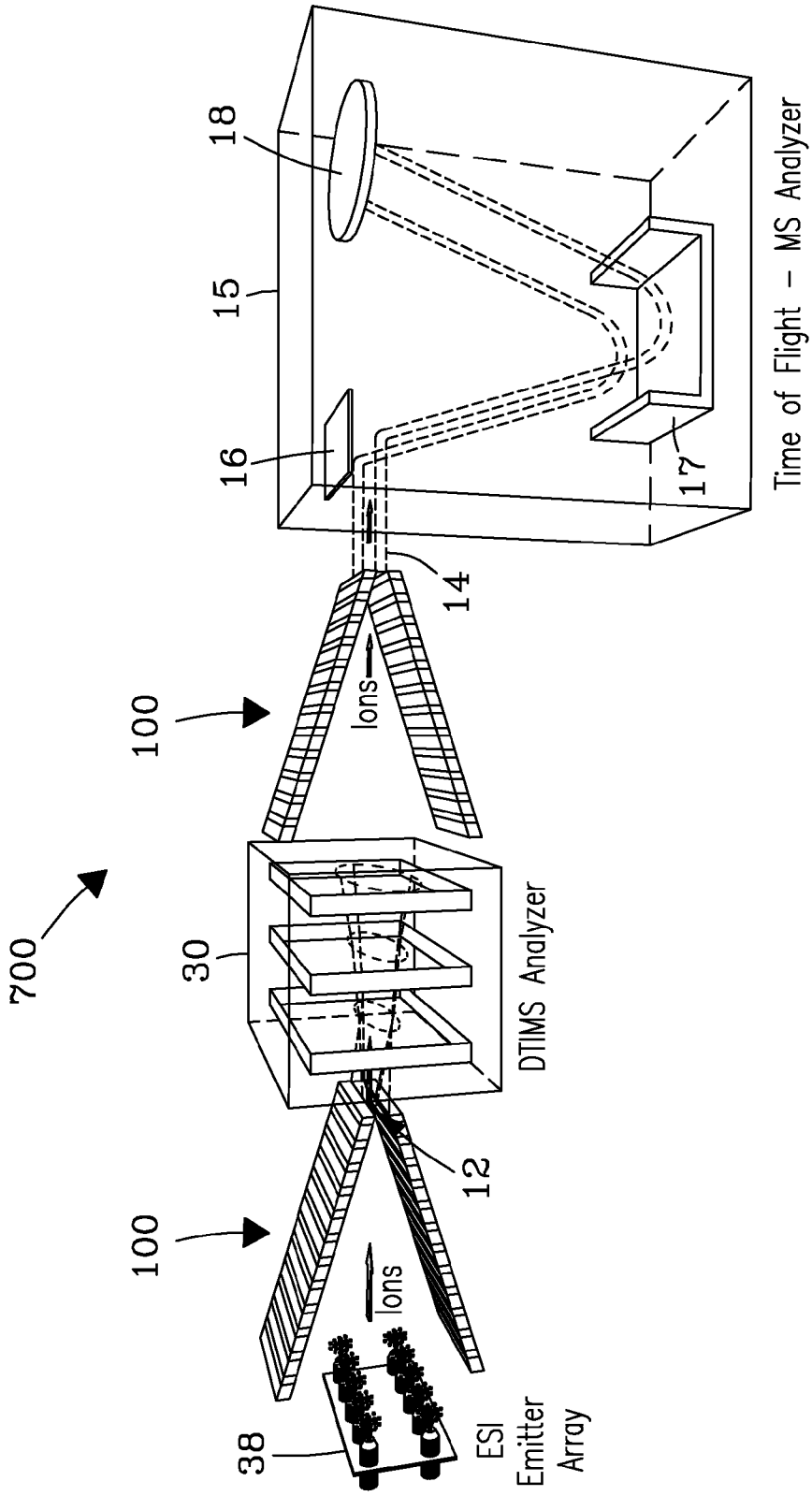
700
100
100
38
ESI
Emitter
Array
Ions
Ions
12
30
DTIMS Analyzer
14
16
15
18
17
Time of Flight – MS Analyzer

Fig. 10