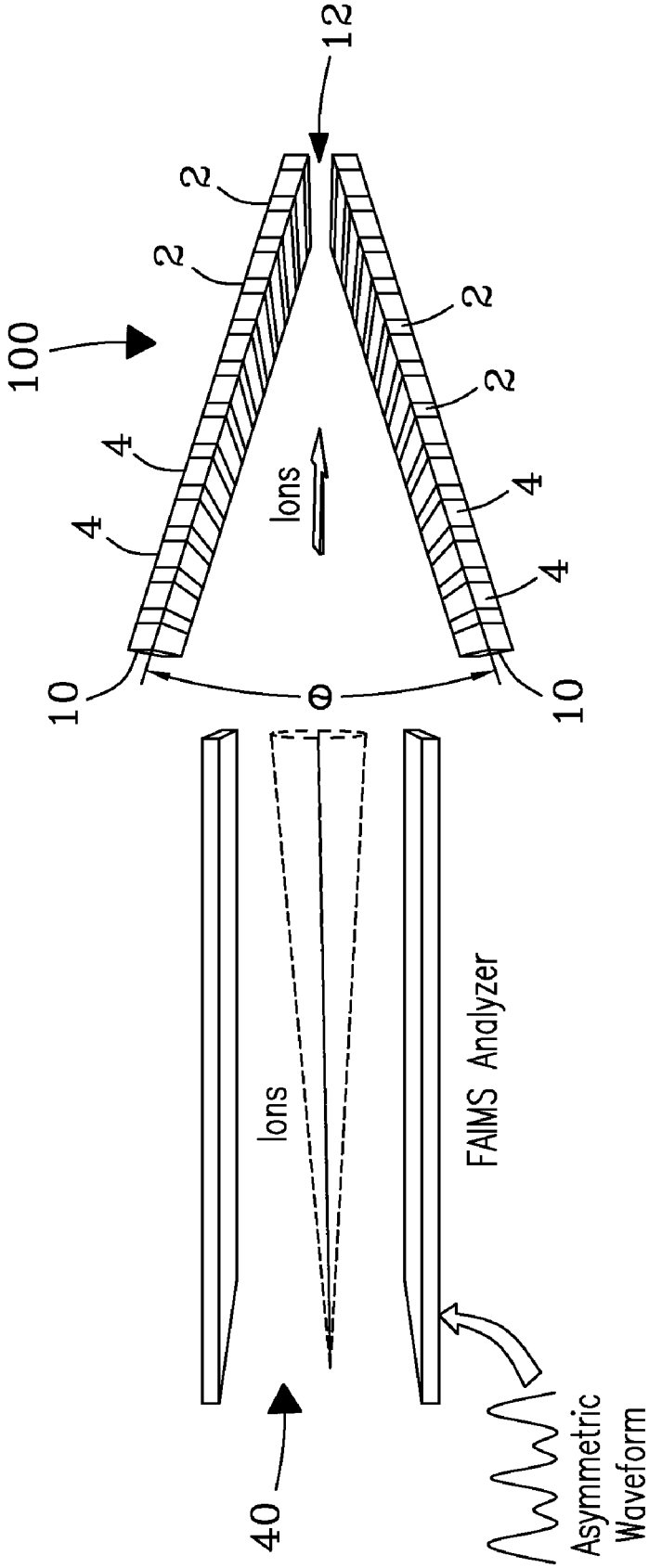
100
12
2
2
2
2
4
4
4
4
10
10
θ
Ions
Ions
FAIMS Analyzer
40
Asymmetric
Waveform

Fig. 9c