US007899443B2

(12) **United States Patent**
Moran et al.

(10) **Patent No.: US 7,899,443 B2**
(45) **Date of Patent: Mar. 1, 2011**

(54) **MULTI-ACCESS SOLID STATE MEMORY DEVICES AND A TELEPHONE UTILIZING SUCH**

(75) Inventors: **Dov Moran**, Kefar Saba (IL); **Mordechai Teicher**, Hod Hasharon (IL)

(73) Assignee: **Modu Ltd.**, Kfar Saba (IL)

(*) Notice: Subject to any disclaimer, the term of this patent is extended or adjusted under 35 U.S.C. 154(b) by 22 days.

(21) Appl. No.: **12/512,621**

(22) Filed: **Jul. 30, 2009**

(65) **Prior Publication Data**

US 2009/0298520 A1 Dec. 3, 2009

Related U.S. Application Data

(60) Continuation of application No. 12/233,618, filed on Sep. 19, 2008, now Pat. No. 7,693,548, which is a division of application No. 10/359,489, filed on Feb. 6, 2003, now Pat. No. 7,433,712.

(51) **Int. Cl.**
H04M 11/10 (2006.01)

(52) **U.S. Cl.** **455/413**; 455/412.1; 455/412.2; 455/557; 709/200; 705/3

(58) **Field of Classification Search** 455/412.1–415, 455/557, 446, 556; 709/200, 204, 206; 705/3, 705/51

See application file for complete search history.

(56) **References Cited**

U.S. PATENT DOCUMENTS

5,189,632 A 2/1993 Paajanen et al.
5,634,005 A * 5/1997 Matsuo 709/206
5,745,750 A 4/1998 Porcaro
5,748,084 A 5/1998 Isikoff
5,946,326 A 8/1999 Rinne
6,014,688 A * 1/2000 Venkatraman et al. 709/206
6,128,661 A 10/2000 Flanagin et al.
6,138,146 A * 10/2000 Moon et al. 709/206
6,195,686 B1 * 2/2001 Moon et al. 709/206
6,219,694 B1 4/2001 Lazaridis et al.
6,269,371 B1 7/2001 Ohnishi
6,272,545 B1 8/2001 Flanagin et al.
6,304,897 B1 * 10/2001 Venkatraman et al. 709/206
6,308,062 B1 10/2001 Chien et al.
6,362,610 B1 3/2002 Yang
6,377,790 B1 4/2002 Ishii
6,408,351 B1 6/2002 Hamdi et al.
6,427,078 B1 7/2002 Wilska et al.
6,434,535 B1 8/2002 Kupka et al.

(Continued)

FOREIGN PATENT DOCUMENTS

WO 0141409 A1 6/2001

(Continued)

OTHER PUBLICATIONS

Kyocera 7135; Smartphone Product Detail Page; Retrieved from the Internet <http:///www.kyocera-wireless.com/showroom/showcase/coming_soon7135.htm>; Oct. 9, 2002; pp. 1-2.

(Continued)

Primary Examiner — Minh D Dao
(74) *Attorney, Agent, or Firm* — Soquel Group LLC

(57) **ABSTRACT**

A method of sending e-mail from a computer, including attaching a telephone to a computer, saving at least one e-mail message from the computer on the telephone, activating the telephone, and automatically sending the e-mail message after the activating.
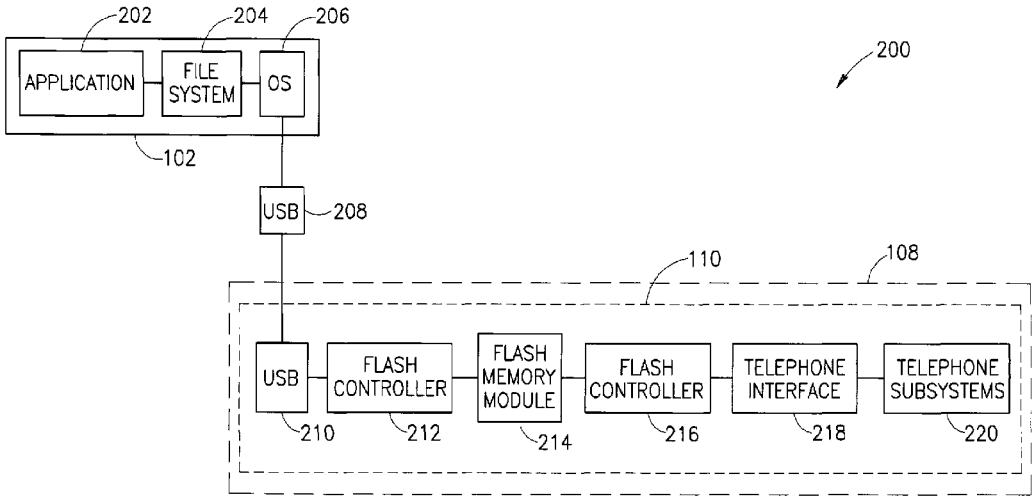
13 Claims, 11 Drawing Sheets