US005299043A

United States Patent [19]

Taylor et al.

[11] Patent Number: 5,299,043

[45] Date of Patent: Mar. 29, 1994

[54] UNDERWATER LIQUID CRYSTAL DISPLAY APPARATUS HAVING IDENTICAL POLARIZERS AND REFLECTOR IN BOTH THE MATTING AND LIQUID CRYSTAL CELL

[75] Inventors: George W. Taylor, Princeton, N.J.; Andrew Magion, Yardley, Pa.

[73] Assignee: Merlin Industries, Trenton, N.J.

[21] Appl. No.: 21,200

[22] Filed: Feb. 23, 1993

[51] Int. Cl.[5] G02F 1/13

[52] U.S. Cl. 359/83; 359/63; 359/70; 359/89

[58] Field of Search 359/36, 62, 63, 70, 359/83, 82, 89; 345/38, 50

[56] References Cited

U.S. PATENT DOCUMENTS

4,202,607	5/1980	Washizuka et al.	359/83
4,403,830	9/1983	Gerstner	359/70
4,408,836	10/1983	Kikuno	359/82
4,412,214	10/1983	Tanaka et al.	359/87
4,824,212	4/1989	Taniguchi	359/55

FOREIGN PATENT DOCUMENTS

0395794	11/1990	European Pat. Off.	359/62
0278827	12/1986	Japan	359/63
0222224	9/1989	Japan	359/83
0302222	12/1989	Japan	359/62

Primary Examiner—William L. Sikes
Assistant Examiner—Tai V. Duong
Attorney, Agent, or Firm—Michael Y. Epstein

[57] ABSTRACT

A display apparatus for underwater use comprises a hermetically sealed enclosed including a liquid crystal display device. The device comprises a liquid crystal cell disposed between layers of light polarizers and a light reflector. The combination of cell, polarizers and reflector displays either bright images on a dark background or the reverse. To make the edges of the cell substantially invisible, for improving readability of the display, the liquid crystal cell is surround by a matting comprising the identical layers of light polarizers and reflector used in combination with the liquid crystal cell. A common matting can be used with a mosaic of cells to create the appearance of a single, large area cell, or with several cells to display independent images.
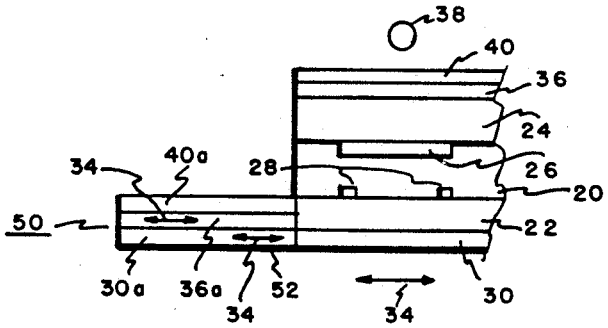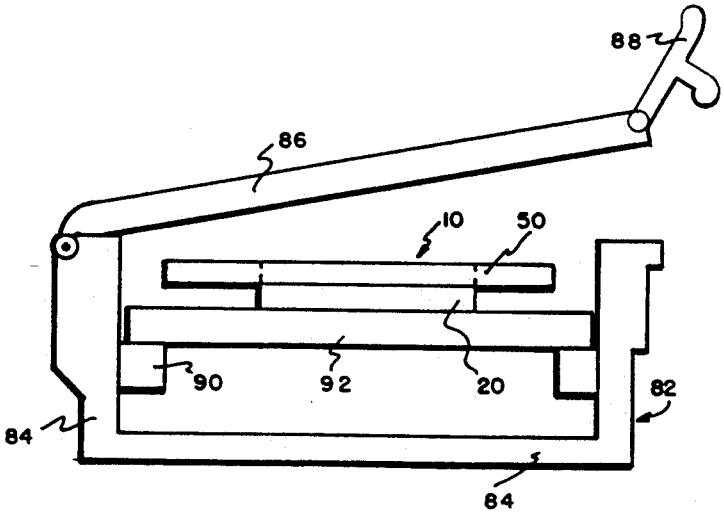
5 Claims, 2 Drawing Sheets