No. 696,143. Patented Mar. 25, 1902.

R. M. HUNTER.

MOTOR VEHICLE.

(Application filed Mar. 11, 1901.)

(No Model.)

FIG. 1

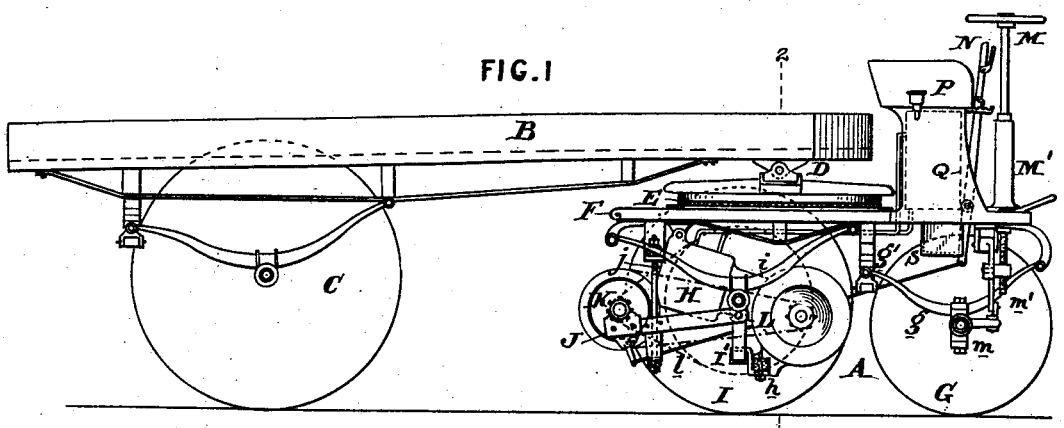

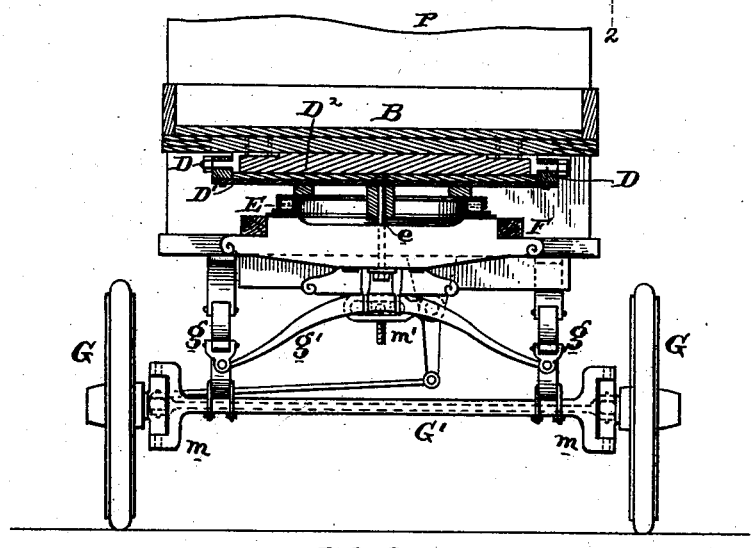

FIG. 2

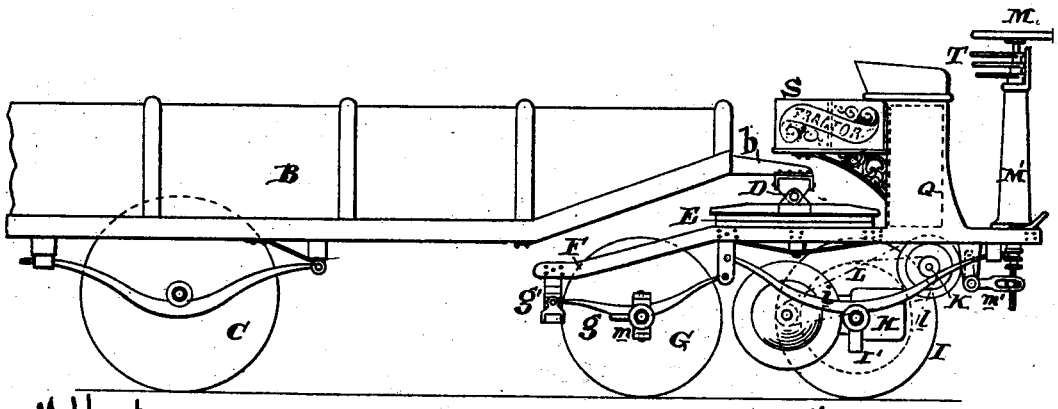

FIG. 3

Attest
P. M. Kelly.
Robt. M. Hunter

Inventor
R. M. Hunter

THE NORRIS PETERS CO., PHOTO-LITHO., WASHINGTON, D. C.