Jan. 22, 1957 B. M. BOWMAN 2,778,743

METHOD OF MAKING ELECTRICAL CARBON-FILM RESISTORS

Filed Nov. 16, 1954

FIG. 1

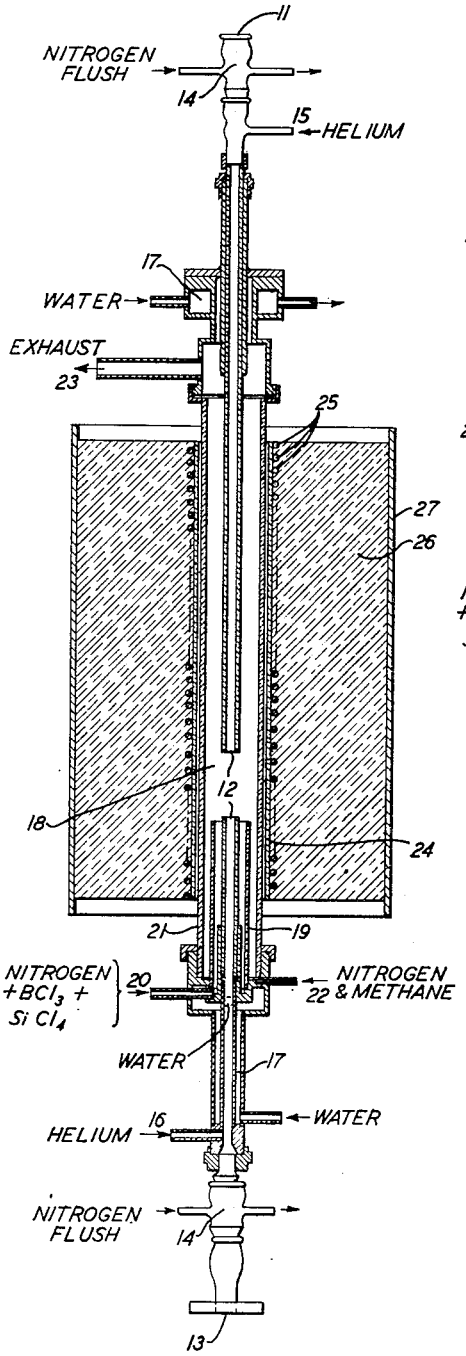


FIG. 2

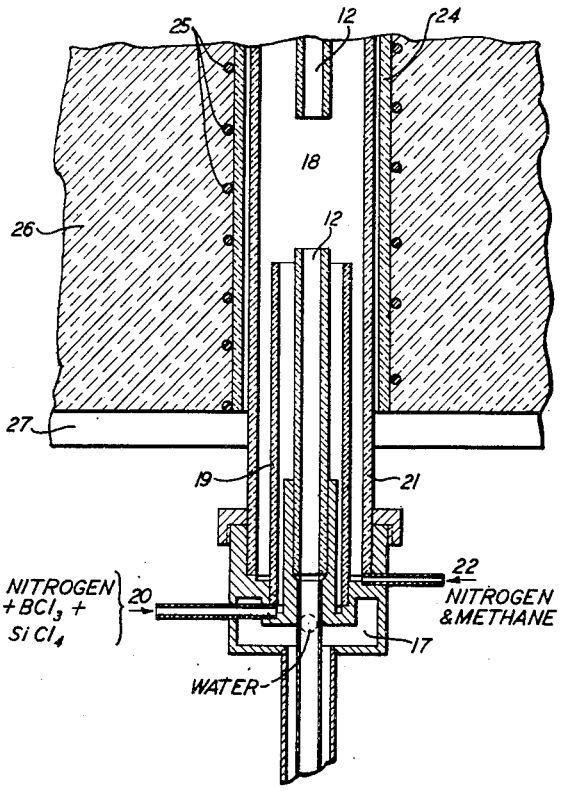


FIG. 3

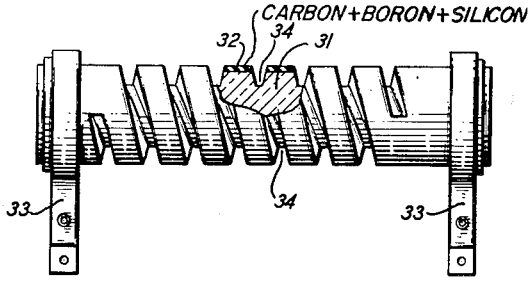


INVENTOR
B. M. BOWMAN
BY B. H. Jackson
ATTORNEY