US008565843B1

(12) **United States Patent**
Lugo

(10) **Patent No.: US 8,565,843 B1**
(45) **Date of Patent: Oct. 22, 2013**

(54) **PORTABLE DEVICE SHELL**

(75) Inventor: **Javier A. Lugo**, Coral Gables, FL (US)

(73) Assignee: **Lugovations LLC**, Coral Gables, FL (US)

(*) Notice: Subject to any disclaimer, the term of this patent is extended or adjusted under 35 U.S.C. 154(b) by 395 days.

(21) Appl. No.: **12/778,706**

(22) Filed: **May 12, 2010**

Related U.S. Application Data

(60) Provisional application No. 61/177,806, filed on May 13, 2009.

(51) **Int. Cl.**
H04M 1/00 (2006.01)

(52) **U.S. Cl.**
USPC **455/575.4**; 455/556.1

(58) **Field of Classification Search**
CPC H04M 1/72522; H04M 1/0237
USPC 455/575.1–575.9, 556.1, 557, 90.3
See application file for complete search history.

(56) **References Cited**

U.S. PATENT DOCUMENTS

5,138,649	A	8/1992	Krisbergh et al.	
5,189,358	A *	2/1993	Tomura et al.	455/575.9
5,189,632	A *	2/1993	Paajanen et al.	455/556.2
5,974,334	A *	10/1999	Jones, Jr.	455/556.2
5,982,355	A	11/1999	Jaeger et al.	
6,192,236	B1	2/2001	Irvin	
6,346,891	B1 *	2/2002	Feinleib et al.	340/12.3
6,445,933	B1	9/2002	Pettit	
7,079,879	B1 *	7/2006	Sylvester et al.	455/575.8
7,221,960	B2 *	5/2007	Schlegel	455/556.1
7,376,441	B2	5/2008	Lee	
7,610,016	B2 *	10/2009	Schmitt et al.	455/557
7,612,997	B1 *	11/2009	Diebel et al.	361/679.56
7,831,276	B2 *	11/2010	Kumar	455/557
8,064,952	B2 *	11/2011	Rofougaran et al.	455/556.1
2003/0186727	A1 *	10/2003	Gurner	455/575.1
2004/0087335	A1 *	5/2004	Peiker	455/556.2
2004/0121819	A1 *	6/2004	Vogel	455/575.9
2005/0090301	A1 *	4/2005	Lange et al.	455/575.8
2005/0192051	A1	9/2005	Tokuhashi	
2006/0230192	A1 *	10/2006	Parry et al.	710/15
2007/0035412	A1	2/2007	Dvorak et al.	
2007/0232233	A1 *	10/2007	Liu et al.	455/41.2
2007/0238481	A1	10/2007	Gaucherot	
2008/0051160	A1 *	2/2008	Seil et al.	455/575.1
2008/0070621	A1	3/2008	Ou Yang et al.	
2008/0167094	A1 *	7/2008	Dinh et al.	455/575.3
2009/0005167	A1	1/2009	Arrasvuori et al.	
2009/0064279	A1	3/2009	Ardolino	
2009/0088204	A1 *	4/2009	Culbert et al.	455/556.1
2009/0156251	A1	6/2009	Cannistraro et al.	
2009/0163140	A1	6/2009	Packham et al.	
2010/0273530	A1 *	10/2010	Jarvis et al.	455/566
2011/0098087	A1 *	4/2011	Tseng	455/556.1

* cited by examiner

Primary Examiner — Lana N Le
(74) *Attorney, Agent, or Firm* — Albert Bordas, P.A.

(57) **ABSTRACT**

A portable device shell, comprising an adapter assembly comprising a first cavity to snugly receive a portable electronic device and a control assembly comprising a second cavity to snugly receive the adapter assembly. Integrated electronics act in concert when the adapter assembly snugly receives the portable electronic device and the control assembly snugly receives the adapter assembly. An infrared emitter transmitter/receiver, radio frequency and/or a wireless medium control and receive status from third party devices. The control assembly comprises a battery as a power source. The portable electronic device is a hybrid mobile device, or having or serving as a phone and/or mobile communications platform, and comprises a first connector port and a screen.
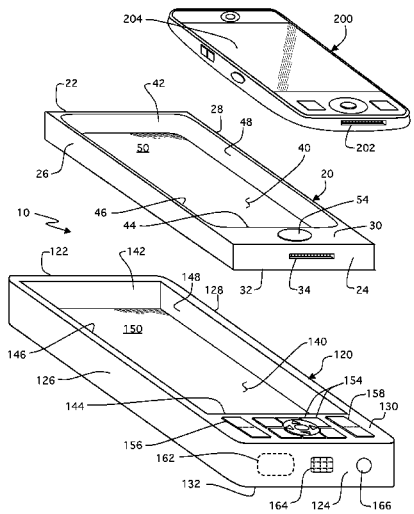
16 Claims, 3 Drawing Sheets