US006552743B1

(12) **United States Patent**
Rissman

(10) **Patent No.: US 6,552,743 B1**
(45) **Date of Patent: Apr. 22, 2003**

(54) **DIGITAL CAMERA-READY PRINTER**

(75) Inventor: **Paul Rissman**, Palo Alto, CA (US)

(73) Assignee: **Hewlett Packard Development Company, L.P.**, Houston, TX (US)

(*) Notice: Subject to any disclaimer, the term of this patent is extended or adjusted under 35 U.S.C. 154(b) by 0 days.

(21) Appl. No.: **09/057,431**

(22) Filed: **Apr. 8, 1998**

(51) **Int. Cl.**[7] **H04N 5/225**
(52) **U.S. Cl.** **348/207.2**; 348/375
(58) **Field of Search** 348/373, 375, 348/376, 333.01, 333.05, 333.11, 333.12, 207.2, 14.02, 14.04, 231.99, 231.7, 231.9; 358/909.1, 906, 1.1, 1.6; 347/2

(56) **References Cited**

U.S. PATENT DOCUMENTS

4,074,324	A		2/1978	Barrett	358/296
4,827,347	A		5/1989	Bell	358/224
4,937,676	A	*	6/1990	Finelli et al.	348/375
5,289,217	A		2/1994	Rosenblatt	354/76
5,493,409	A		2/1996	Maeda et al.	358/296
5,499,113	A	*	3/1996	Tsuboi et al.	358/479
5,579,116	A		11/1996	Sugiyama et al.	358/296
5,606,420	A	*	2/1997	Maeda et al.	358/296
5,806,993	A	*	9/1998	Petterutti et al.	400/88
5,825,408	A	*	10/1998	Yuyama et al.	348/14.02
6,115,137	A	*	9/2000	Ozawa et al.	358/1.6
6,229,565	B1	*	5/2001	Bobry	348/373
6,380,975	B1	*	4/2002	Suzuki	348/232
2002/0196345	A1	*	12/2002	No	

FOREIGN PATENT DOCUMENTS

EP	0689157 A2		12/1994	G06K/15/00
EP	0718716 A1		6/1996	G03G/15/01
JP	3-29471	*	2/1991	H04N/5/225
WO	WO 97/50243		12/1997	H04N/1/00
WO	WO 98/15116		4/1998	H04N/5/225

* cited by examiner

Primary Examiner—Wendy R. Garber
Assistant Examiner—Jacqueline Wilson

(57) **ABSTRACT**

A system and method utilize a digital camera-ready printer which can print directly from a variety of conventional digital cameras on the market. The digital camera-ready printer includes a camera interface that can link with a digital camera in different modes to transfer frames of digital image data from the digital cameras to the digital camera-ready printer. Preferably, the camera interface includes a hot shoe receptor to establish a convenient hot shoe link between the digital camera and the digital camera-ready printer. The digital camera-ready printer includes a processor that can identify the coupled digital camera in order to instruct the digital camera to transmit the frames of digital image data. The processor can also convert the format of the digital image data to a predetermined image file format. The processor of the digital camera-ready printer along with a display device allows a user to edit and manipulate an electronic image represented by a single frame of digital image data prior to printing.
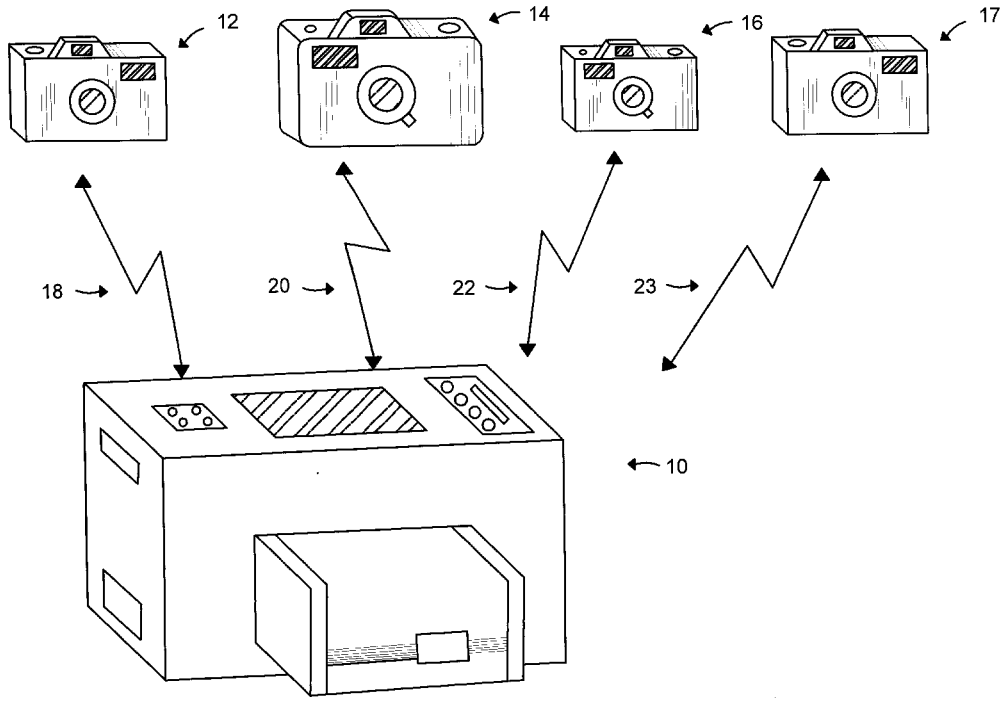
21 Claims, 5 Drawing Sheets