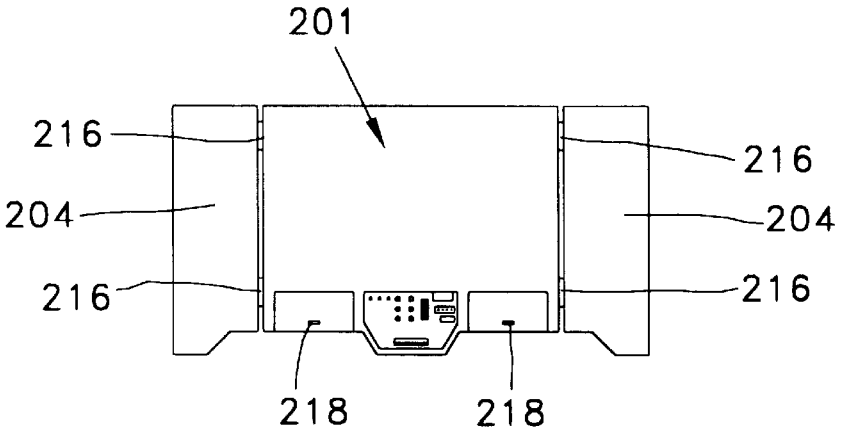

FIG 21

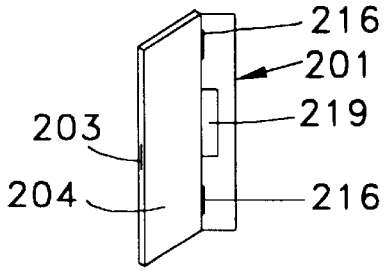

FIG 22

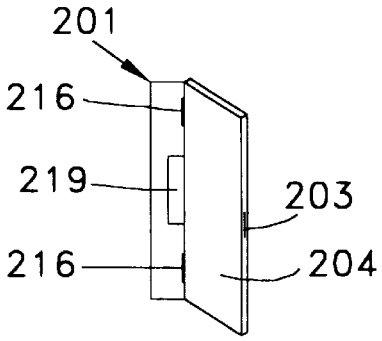

FIG 23

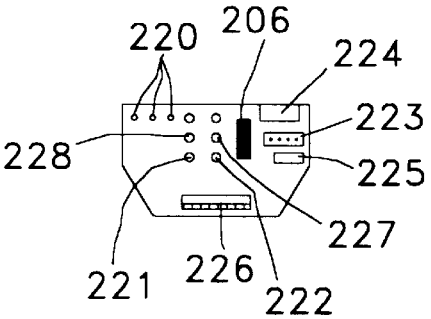

FIG 24

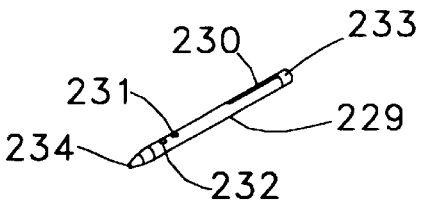

FIG 25